TC-FX500R

US Model
Canadian Model
AEP Model
UK Model
E Model

'**Dolby**' and the double-D symbol are the trade marks of Dolby Laboratories. Noise reduction system manufactured under license from Dolby Laboratories Licensing Corporation.

STEREO CASSETTE DECK

SPECIFICATIONS

Recording system 4-track 2-channel stereo
Fast-forward and rewind time
Approx. 100 sec. (with C-60 cassette)
Bias frequency 105 kHz
Signal-to-noise ratio (NAB, at peak level)

Cassette / Dolby NR switch	OFF	B-TYPE ON	C-TYPE ON
TYPE IV (Sony METALLIC)	58 dB	65 dB	71 dB
TYPE III (Sony FeCr)	59 dB	66 dB	72 dB
TYPE II (Sony EHF)	56 dB	63 dB	69 dB
TYPE I (Sony HFX)	54 dB	61 dB	67 dB

Total harmonic distortion
1.0% (with Sony METALLIC and FeCr cassettes)
Frequency response DOLBY NR OFF
- With TYPE IV cassette (Sony METALLIC)
  20 - 18,000 Hz
  30 - 17,000 Hz (±3 dB)
  30 - 13,000 Hz (±3 dB, 0 VU recording)
- With TYPE III cassette (Sony FeCr)
  20 - 18,000 Hz
  30 - 17,000 Hz (±3 dB)
- With TYPE II cassete (Sony EHF)
  20 - 18,000 Hz
  30 - 16,000 Hz (±3 dB)
- With TYPE I cassette (Sony HFX)
  20 - 16,000 Hz

0 dB = 0.775 V

Wow and flutter 0.05% WRMS

Tape Transport Mechanism Type	TCM-130R1

— Continued on Page 2 —

SAFETY-RELATED COMPONENT WARNING!!

COMPONENTS IDENTIFIED BY SHADING AND MARK ⚠ ON THE SCHEMATIC DIAGRAMS, EXPLODED VIEWS AND IN THE PARTS LIST ARE CRITICAL TO SAFE OPERATION. REPLACE THESE COMPONENTS WITH SONY PARTS WHOSE PART NUMBERS APPEAR AS SHOWN IN THIS MANUAL OR IN SUPPLEMENTS PUBLISHED BY SONY.

ATTENTION AU COMPOSANT AYANT RAPPORT À LA SÉCURITÉ!

LES COMPOSANTS IDENTIFIES PAR UNE TRAME ET UNE MARQUE ⚠ SUR LES DIAGRAMMES SCHÉMATIQUES, LES VUES ÉCLATÉES ET LA LISTE DES PIÉCES SONT CRITIQUES POUR LA SÉCURITÉ DE FONCTIONNEMENT. NE REMPLACER CES COMPOSANTS QUE PAR DES PIÈCES SONY DONT LES NUMÉROS SONT DONNÉS DANS CE MANUEL OU DANS LES SUPPLÉMENTS PUBLIÉS PAR SONY.

MICROFILM

SONY®

SERVICE MANUAL

TC-FX500R

US Model
Canadian Model
AEP Model
UK Model
E Model

'Dolby' and the double-D symbol are the trade marks of Dolby Laboratories. Noise reduction system manufactured under license from Dolby Laboratories Licensing Corporation.

STEREO CASSETTE DECK

SPECIFICATIONS

Recording system 4-track 2-channel stereo
Fast-forward and rewind time
Approx. 100 sec. (with C-60 cassette)
Bias frequency 105 kHz
Signal-to-noise ratio (NAB, at peak level)

Cassette \ Dolby NR switch	OFF	B-TYPE ON	C-TYPE ON
TYPE IV (Sony METALLIC)	58 dB	65 dB	71 dB
TYPE III (Sony FeCr)	59 dB	66 dB	72 dB
TYPE II (Sony EHF)	56 dB	63 dB	69 dB
TYPE I (Sony HFX)	54 dB	61 dB	67 dB

Total harmonic distortion
1.0% (with Sony METALLIC and FeCr cassettes)
Frequency response DOLBY NR OFF
- With TYPE IV cassette (Sony METALLIC)
  20 - 18,000 Hz
  30 - 17,000 Hz (±3 dB)
  30 - 13,000 Hz (±3 dB, 0 VU recording)
- With TYPE III cassette (Sony FeCr)
  20 - 18,000 Hz
  30 - 17,000 Hz (±3 dB)
- With TYPE II cassete (Sony EHF)
  20 - 18,000 Hz
  30 - 16,000 Hz (±3 dB)
- With TYPE I cassette (Sony HFX)
  20 - 16,000 Hz

0 dB = 0.775 V

Wow and flutter 0.05% WRMS

Tape Transport Mechanism Type	TCM-130R1

— Continued on Page 2 —

SAFETY-RELATED COMPONENT WARNING!!

COMPONENTS IDENTIFIED BY SHADING AND MARK ⚠ ON THE SCHEMATIC DIAGRAMS, EXPLODED VIEWS AND IN THE PARTS LIST ARE CRITICAL TO SAFE OPERATION. REPLACE THESE COMPONENTS WITH SONY PARTS WHOSE PART NUMBERS APPEAR AS SHOWN IN THIS MANUAL OR IN SUPPLEMENTS PUBLISHED BY SONY.

ATTENTION AU COMPOSANT AYANT RAPPORT À LA SÉCURITÉ!

LES COMPOSANTS IDENTIFIÉS PAR UNE TRAME ET UNE MARQUE ⚠ SUR LES DIAGRAMMES SCHÉMATIQUES, LES VUES ÉCLATÉES ET LA LISTE DES PIÈCES SONT CRITIQUES POUR LA SÉCURITÉ DE FONCTIONNEMENT. NE REMPLACER CES COMPOSANTS QUE PAR DES PIÈCES SONY DONT LES NUMÉROS SONT DONNÉS DANS CE MANUEL OU DANS LES SUPPLÉMENTS PUBLIÉS PAR SONY.

SONY®

SERVICE MANUAL

MICROFILM

Inputs
Microphone inputs (phone jacks)
Sensitivity 0.25 mV (−70 dB)
For a low-impedance microphone
Line inputs (phono jacks)
Sensitivity 77.5 mV (−20 dB)
Input impedance 50 k ohms
Outputs
Line outputs (phono jacks)
Output level 0.435 V (−5 dB) at load impedance 50 k ohms
Load impedance over 10 k ohms
Headphone output
Output level −28 dB at a load impedance of 8 ohms

General
Power requirements 120 V ac, 60 Hz
Power consumption 14 watts
Dimensions Approx. 430 × 105 × 275 mm (w/h/d) (17 × 4 1/4 × 10 7/8 inches) including projecting parts and controls
Weight Approx. 4.7 kg (10 lbs 6 oz)

SAFETY CHECK-OUT (US Model)

After correcting the original service problem, perform the following safety check before releasing the set to the customer:
Check the antenna terminals, metal trim, "metallized" knobs, screws, and all other exposed metal parts for AC leakage. Check leakage as described below.

LEAKAGE TEST

The AC leakage from any exposed metal part to earth ground and from all exposed metal parts to any exposed metal part having a return to chassis, must not exceed 0.5 mA (500 microampers). Leakage current can be measured by any one of three methods.

1. A commercial leakage tester, such as the Simpson 229 or RCA WT-540A. Follow the manufacturers' instructions to use these instruments.
2. A battery-operated AC milliammeter. The Data Precision 245 digital multimeter is suitable for this job.
3. Measuring the voltage drop across a resistor by means of a VOM or battery-operated AC voltmeter. The "limit" indication is 0.75 V, so analog meters must have an accurate low-voltage scale. The Simpson 250 and Sanwa SH-63Trd are examples of a passive VOM that is suitable. Nearly all battery operated digital multimeters that have a 2V AC range are suitable. (See Fig. A)

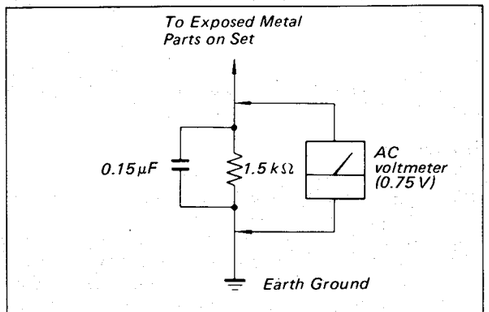

Fig. A. Using an AC voltmeter to check AC leakage.

FEATURES

Auto-reverse playback with roto-bilateral record/playback head
Continuous playback of both sides of the cassette is possible without turning the cassette over. When the tape reaches the end of the front side, the roto-bilateral record/playback head reverses position quickly and the other side will be played back automatically. This head assures the same performance characteristics in either tape transport direction.

Blank skip function
Blank spaces of more than 10 seconds long can be skipped in either fast-forward or fast-reverse mode and only the recorded portions of the tape played back.

Newly-developed LaserAmorphous head
The record/playback head is made of a special amorphous magnetic alloy developed by Sony, and its cores are solidly welded by laser. This new highly-durable head provides a wider dynamic range and a more extended frequency response, especially in the high-frequency range. The head is designed to take full advantage of the potential of the metal tapes.

C-type Dolby NR (noise reduction) system
In addition to the conventional B-type Dolby NR system, the TC-FX500R employs the newly-developed C-type Dolby NR system which reduces tape noise twice as effectively as the B-type system. The C-type system also incorporates an anti-saturation network to improve the high-frequency dynamic range by 4 dB at 10 kHz.

Full-logic "feather-touch" operation
At the slightest touch, the "feather-touch" function buttons which control a microprocessor enable you to switch directly from one mode to another without going through the stop mode.

Automatic tape select system
The tape type is automatically detected and the recorder is adjusted to its optimum bias current for recording and the optimum equalization for both recording and playback by simply inserting the cassette in the cassette holder.

The AMS (Automatic Music Sensor) system
Using this system, it is possible to locate the beginning of the selection being played or the following selection. The AMS searches either forward or in reverse for the blank space between selections. Playback will begin automatically from the beginning of the selection.

Auto play
The auto play function makes automatic replay possible promptly after the tape is rewound to the beginning.

Remote control operation
Using the optional RM-44 or RM-70 remote control unit, various operations—recording, playback, AMS, record muting operation, etc.—can be remotely controlled.
When the RM-65 synchro remote control unit is used to connect this cassette deck with a turntable equipped with a synchro remote control jack or a TC-PB5 stereo cassette player, the operation of the cassette deck and the turntable or TC-PB5 will be synchronized.

TC-FX500R

TABLE OF CONTENTS

SECTION 1 OUTLINE.....5

1-1. FUNCTION OF CONTROL.....5
1-2. HANDRING PRECAUTION FOR MOS ICs.....7
1-3. CIRCUIT DESCRIPTION.....9
1-4. MECHANISM OPERATION....30
1-5. TROUBLE CHECK.....50
1-6. BLOCK DIAGRAMS.....51

SECTION 2 DISASSEMBLY.....55

SECTION 3 ADJUSTMENT.....59

3-1. MECHANICAL ADJUSTMENT..59
3-2. ELECTRICAL ADJUSTMENT..62

SECTION 4 DIAGRAMS.....66

4-1. MOUNTING DIAGRAM.....66
4-2. SCHEMATIC DIAGRAM.....69
4-3. SCHEMATIC DIAGRAM.....73
4-4. MOUNTING DIAGRAM.....77

SECTION 5 EXPLODED VIEWS AND PARTS LIST..82

5-1. EXPLODED VIEW.....82
5-2. PARTS LIST.....88

SECTION 1
OUTLINE

1-1. FUNCTION OF CONTROLS

The numbers in the photo are keyed to the following explanations.

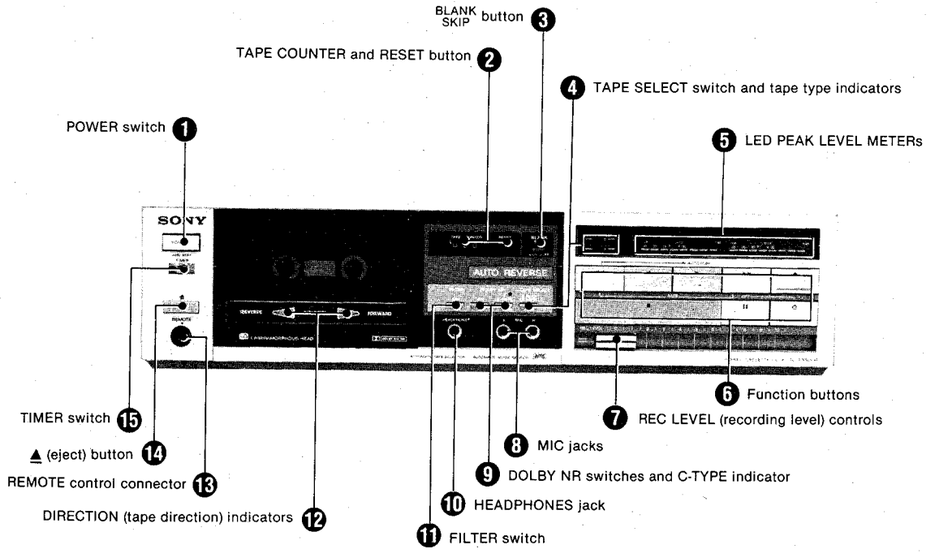

❶ POWER switch
This turns the power on or off. The peak level meters illuminate when the unit is turned on.

❷ TAPE COUNTER and RESET button
The tape counter provides a numerical reference point while recording which can be used to index a recorded cassette. To reset to zero, press the RESET button.

❸ BLANK SKIP button
Depress this button to skip blank spaces of more than 10 seconds long during playback.

❹ TAPE SELECT switch and tape type indicators
Generally set this switch to AUTO (⎍). The automatic tape select system will then operate. When using a TYPE III (Fe-Cr) cassette or a TYPE IV (METAL) cassette which has no METAL tape detector slots, depress this switch to set it to the III Fe-Cr (IV METAL) position (⏏).
When inserting a cassette, one of the tape type indicators will light up depending on the type of tape and the position of the TAPE SELECT switch.

❺ LED PEAK LEVEL METERs
These meters show the peak input level of each channel during recording, and recorded levels in the playback mode. They follow the transient peaks of high-level inputs that are too brief to be followed by conventional VU meters so that the optimum recording level can be accurately set.

❻ Function buttons
It is possible to switch directly from one mode to another. The indicator lamps light when the tape deck is in the record or pause mode.

◄◄ (fast-reverse) button : Press this button to advance the tape rapidly to the left.
◄ (reverse) button : Press this button to play back the back side of the cassette. The tape is transported to the left.
► (forward) button : Press this button to play back the front side of the cassette. The tape is transported to the right. To record, press this button while holding the ● button down.
►► (fast-forward) button : Press this button to advance the tape rapidly to the right.
● (record) button : Press this button together with the ► button to start recording. Also press this button before adjusting the recording level.
■ (stop) button : To stop the tape, press this button.
❚❚ (pause) button : To pause for a moment during recording or playback, press this button. This button is also used to control more precisely the start of recording and to release the record muting mode.
⭘ (record muting) button : Press this button to eliminate unwanted material and to insert a blank space during recording.

❼ REC LEVEL (recording level) controls
These controls adjust the recording level. The upper slide bar is for the left channel and the lower for the right channel.

TC-FX500R

❽ MIC jacks
Any low-impedance microphone equipped with a phone plug may be used. If your microphone is equipped with a mini plug, you will need a plug adaptor.

❾ DOLBY NR switches and C-TYPE indicator
The left switch turns the Dolby NR* (Noise Reduction) system on and off and the right switch selects either the B-type or C-type Dolby NR system.
To record with the Dolby NR process, depress the ON/OFF switch to the ON position and choose between B-TYPE (⎍) and C-TYPE (⏏). The C-TYPE indicator illuminates when the C-type Dolby NR system is selected.
To record without the Dolby NR process, press the ON/OFF switch again to release.
When playing back, set these switches to the same position used in recording.

❿ HEADPHONES jack
Headphones may be inserted either to monitor the input signals to be recorded or to listen to a recording in the playback mode.

⓫ FILTER switch
Normally set this switch to OFF (⎍).
When recording FM stereo broadcasts with the Dolby NR system, set it to ON (⏏) if the 19 kHz pilot signal and the 38 kHz subcarrier have not been adequately supressed by the FM tuner or receiver. If the tuner or the receiver supresses such signals adequately (most high-quality tuners and receivers will), you do not have to set this switch to ON.

⓬ DIRECTION (tape direction) indicators
The ► FORWARD indicator illuminates when the tape is transported to the right during recording or playback of the front side of the cassette. The ◄ REVERSE illuminates when the tape is transported to the left during playback of the back side.

⓭ REMOTE control connector
Connect the optional RM-44 (wireless) or RM-70 (wired) remote control unit to operate the tape transport functions from a distance. The tape deck function buttons are still operative when the remote control unit is connected.
The RM-65 synchro remote control unit can also be connected to this connector. Using this unit, the operation of the TC-FX500R and a turntable equipped with a synchro remote control jack or a TC-PB5 stereo cassette player will be synchronized.
Read the instruction manual of the remote control unit before operating.

⓮ ▲ (eject) button
Press this button to open the cassette holder.

⓯ TIMER switch
You can set the unit to record or play back at a predetermined time by connecting any commercially available timer. To record, set this timer switch to REC. To play back, set it to PLAY.

NOTES ON REPAIR

When the mechanism section is operated with the set in an upside-down position, misoperation may result. For repair while operating the mechanism section, perform with the set in its normal position or standing on its side.

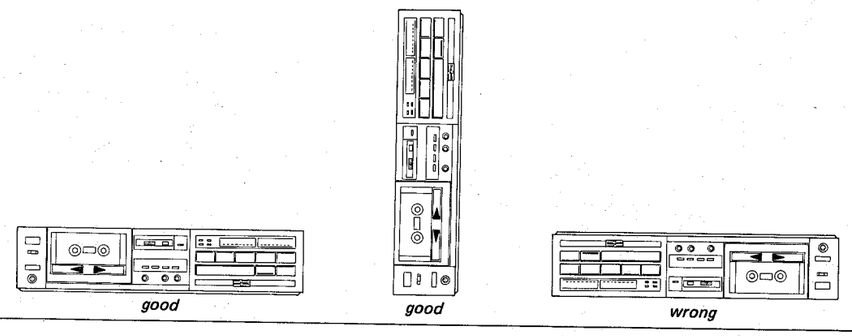

1-2. Handling Precautions for MOS ICs

Generally, the insulation resistance of the oxide layer in MOS IC structures is very high, and the oxide layer is very thin. Because of this, it is possible that the static voltages usually present on clothes and the human body will be enough to generate a potential difference across the insulator, high enough to cause a breakdown of the insulating layer.

The following precautions should be taken while handling these ICs.

(Particular care should be taken under conditions of low humidity.)

Precautions in Replacing MOS ICs

1. Store new ICs by inserting them into a urethane-polyester cushion (which is somewhat conductive), or wrapping it in aluminum foil, so that all the pins are at the same potential.
   (The ICs should be stored in that manner until mounted on the circuit board.)

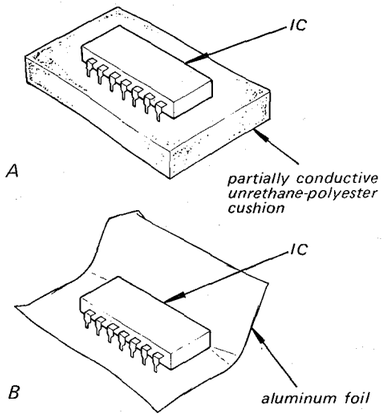

Fig. A

Fig. B

2. Check the soldering iron for possible power-line leakage current. Make sure that there is no leakage path by connecting an ohmmeter to the tip of the soldering iron and the plug as shown in Fig. C. If there is a leakage path, use some other soldering iron.

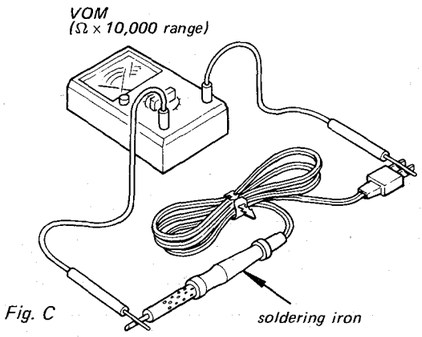

Fig. C

3. Equalize any potential difference between the clothes, the tools in use, the work bench, the set being worked on, and the packaged IC by touching them all in succession with the hands or a conductive wire or tool.
4. The following are effective methods for handling ICs that remove the potential difference across the oxide layer.
   - Use a paper clip modified by soldering in a wire braid insert.

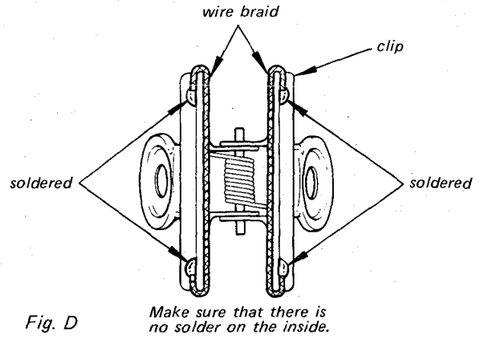

Fig. D

Make sure that there is no solder on the inside.

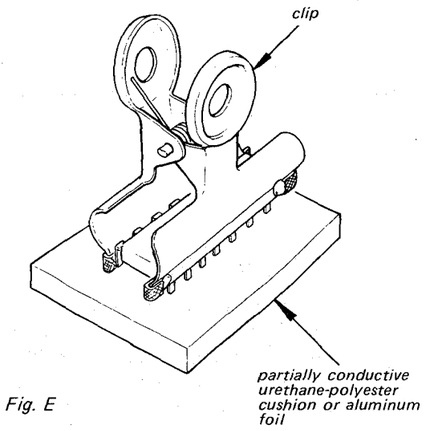

Fig. E

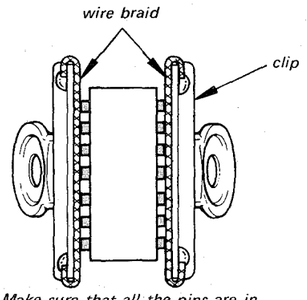

Fig. F

Make sure that all the pins are in contact with the wire braid (all the pins will then be at the same potential.).

- Take a short length of fine bare wire and wind it around the IC so that it shorts all the pins of the IC, while it is still in the urethane-polyester cushion or aluminum foil. This ensures that all the pins are at the same potential.

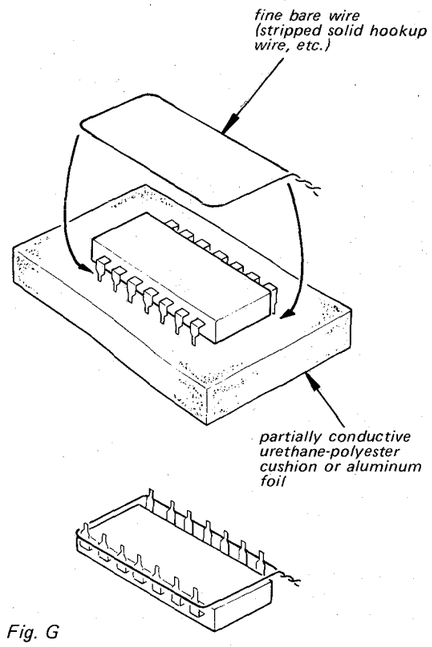

Fig. G

- When it is necessary to handle the IC with the fingers, do not touch any pin, and hold the IC at the ends of its plastic-package case as shown in Fig. H.

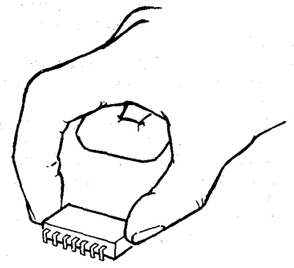

Fig. H

5. Method of Mounting
   Insert the IC while holding it with the modified clip, and solder all the pins with the clip still shorting the pins. (Similarly, solder all the pins while the bare shorting wire is still wound around them.). Remove the clip or the bare shorting wire only after all the pins have been soldered.

Precaution while Checking C-MOS ICs

The C-MOS ICs (Complementary MOS) are MOS ICs that have their output sections made up of N-channel and P-channel push-pull stages to increase their speed of operation. If the output terminal of these ICs comes into contact with B+ or B– voltage, then the FET which is ON at that time will either become shorted or open.

This is valid for all the output sections that are connected together by the interconnections. Even the circuits that are physica'ly separated (and not on the same board) can be destroyed simultaneously.

Example:

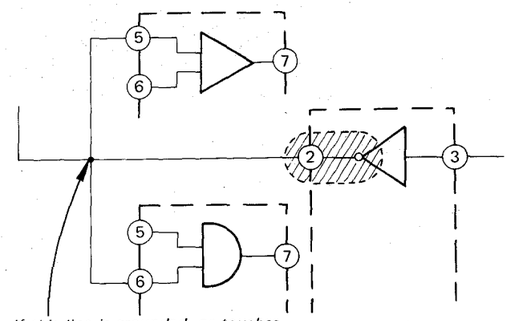

Fig. I

1-3. CIRCUIT DESCRIPTION

FWD AMS (▶+▶▶)

PL1 REVERSE
PL2 FORWARD
PM2
PM1
D503
D503 ISS133
D580,581 ISS133
Q581 2SA1175
Q5802SC2785
PM DRIVE
Q550 SPI201
ROTATE DET
Q510,511 2SC2785
LAMP DRIVE
Q502 2SC2785
SOLENOID DRIVE
【INTERRUPT BOARD】
R550 330
Q550
R540 18
R541 18
Q581
Q580
D581
R581 2.2k
R580 15k
D580
R551 10k
Q510
Q511
Q502
R501 4.7k
R502 4.7k
R506 2.2k
R580 2.2k
R507 820
D513
D502,577 ISS133
D502
C580 2.2/50V
【PM CONTROL BOARD】
D577
R504 680
C501 0.0022
R503 330
IC501
IC501 TC9310N-001
MECHANISM CONTROL
TIMER
REV
FWD
REC
PM1
PM2
FWD-REV FF
REW
LINE MUTE
REC MUTE
BIAS
AMS
MOTOR CONTROL
INPUT
RESET
REW
REV
STOP
FWD
FF
PAUSE
REC
REC MUTE
GND
OSC
SHUT OFF
C503 1/50V
R516 100k
Q507
Q507 2SA1175
BUFFER
R515 51k
C505 0.0047
R582 47k
D582
C582 100/6.3V
R517 22k
D583
D582,583 ISS133
IC566 TC4011
AMS DIRECTION CONTROL
D566–571 1SS133
R572 12k
D569
R571 12k
D568
D567
R569 12k
D566
D570
D571
R520 1k
R521 560
R524 1k
R539 1k
R526 1k
R522 1k
C502 1/50V
C506 50V
C513 0.01
C507 50V
C508 0.01
C509 50V
C510 0.01
C511 0.01
C512 0.01
D584 ISS133
R583 56k
D584
IC563 TC4081
BS DET CHANGING DIRECTION
IC563(1/3)
IC561(1/4)
IC565(1/3)
IC567(1/3)
IC564(1/3)
IC562(1/3)
D565
D565 ISS133
D572 ISS133
D572
R568 12k
C564 0.01
IC562 TC4001
IC564 TC4011
REVERSE MODE CHANG
IC561 TC4069
CLOCK OSC
C583 50V
C560 47/10V
R561 27k
R562 120k
R563 27k
IC560
TIMING CONTROL
D576 ISS133
D576
IC569(1/2)
IC569 TC4001
BLANK SKIP
IC560 TC4024
TIMING CONTROL
IC570
IC571
IC565(1/3)
【BLANK SWITCH BOARD】
S570 BLANK SKIP
ON — OFF
R566 12k
D563
IC568(1/2)
R565 510k
D575
C563 2.2/50V
C562 2.2 50V
D564
D563,564,575 ISS133
IC565 TC4023
MODE DET
C590 0.01
R575 1M
D573 ISS1

Goes H temporarily during the starting of AMS and resets the timing generation circuit. The timing circuit starts operating when this goes L.

AMS gets released when this level changes from H to L.

Goes H temporarily and goes L thereafter.

Goes H/L repetitively at every 1.2 seconds.

When the state changes from H (With no signal input) to L (With signal input) C562 starts to get charged and pin (11) of IC568 goes L. Goes H when the charging is completed. (Takes about 0.6 seconds.)

Goes L when the signal goes off and then comes on again. Goes H after a period of 0.6 seconds.

Pin (3) goes H when both pin (1) and pin (2) are H.

Goes H in the REVIEW state and stays L in all other situations. Therefore, the AMS signal will not be accepted.

Since pin (8) of IC568 goes L when pin (11) of IC568 goes H, C563 starts to get charged. This, in turn, make pin (1) and pin (2) of IC567 go L.

L only during AMS. H at all other times.

With signal input L
With no signal input H

Goes H 1.2 seconds after AMS start. (When pins (8) and (9) of IC562 go L, pin (10) stays at H.)

Goes L when the Reset signal of IC560 is H. At this time the pin (10) of IC562 will be set to L. Thereafter, pin (13) of IC562 goes H/L repetitively.

When pins (12) and (13) go H, pin (11) goes L and thus the REW state will be started.

Goes H in the REV changes from "Wi no signal input". and (5) all go H th releasing the AMS

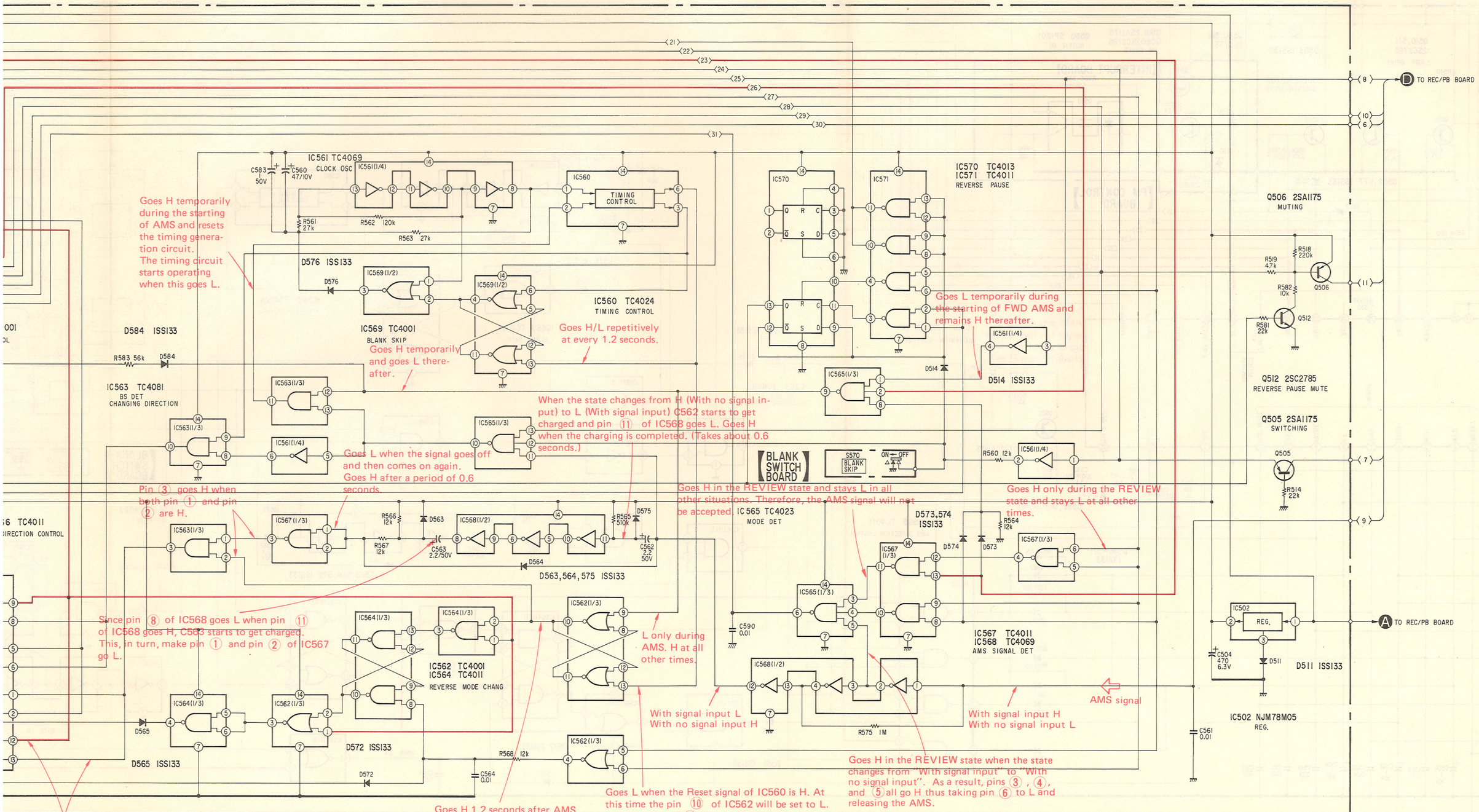

IC561 TC4069
CLOCK OSC
IC560
TIMING CONTROL
IC570 TC4013
IC571 TC4011
REVERSE PAUSE
Q506 2SA1175
MUTING
Goes H temporarily during the starting of AMS and resets the timing generation circuit. The timing circuit starts operating when this goes L.
D576 ISS133
IC569 TC4001
BLANK SKIP
IC560 TC4024
TIMING CONTROL
Goes H/L repetitively at every 1.2 seconds.
Goes H temporarily and goes L thereafter.
Goes L temporarily during the starting of FWD AMS and remains H thereafter.
D514 ISS133
D584 ISS133
IC563 TC4081
BS DET
CHANGING DIRECTION
Q512 2SC2785
REVERSE PAUSE MUTE
Q505 2SA1175
SWITCHING
When the state changes from H (With no signal input) to L (With signal input) C562 starts to get charged and pin 11 of IC568 goes L. Goes H when the charging is completed. (Takes about 0.6 seconds.)
Goes L when the signal goes off and then comes on again. Goes H after a period of 0.6 seconds.
BLANK SWITCH BOARD
Pin 3 goes H when both pin 1 and pin 2 are H.
Goes H in the REVIEW state and stays L in all other situations. Therefore, the AMS signal will not be accepted.
IC565 TC4023
MODE DET
Goes H only during the REVIEW state and stays L at all other times.
D573,574 ISS133
D563,564,575 ISS133
Since pin 8 of IC568 goes L when pin 11 of IC568 goes H, C563 starts to get charged. This, in turn, make pin 1 and pin 2 of IC567 go L.
IC562 TC4001
IC564 TC4011
REVERSE MODE CHANG
L only during AMS. H at all other times.
IC567 TC4011
IC568 TC4069
AMS SIGNAL DET
IC502
REG.
D511 ISS133
AMS signal
With signal input L
With no signal input H
With signal input H
With no signal input L
IC502 NJM78M05
REG.
D565 ISS133
D572 ISS133
Goes H in the REVIEW state when the state changes from "With signal input" to "With no signal input". As a result, pins 3, 4, and 5 all go H thus taking pin 6 to L and releasing the AMS.
Goes L when the Reset signal of IC560 is H. At this time the pin 10 of IC562 will be set to L. Thereafter, pin 13 of IC562 goes H/L repetitively.
Goes H 1.2 seconds after AMS start. (When pins 8 and 9 of IC562 go L, pin 10 stays at H.)
When pins 12 and 13 go H, pin 11 goes L and thus the REW state will be started.
TO REC/PB BOARD

TC-FX500R TC-FX500

FWD AMS
(▶+◀◀)

PL1 REVERSE
PL2 FORWARD
PM2
PM1
D503
D503 ISS133
D580,581 ISS133
Q581 2SA1175
Q582 2SC2785
PM DRIVE
Q550 SPI201
ROTATE DET
Q510,511 2SC2785
LAMP DRIVE
Q502 2SC2785
SOLENOID DRIVE
[INTERRUPT BOARD]
R550 330
Q550
R540 18
R541 18
Q581
R581 2.2k
D581
Q580
R580 15k
D580
R551 10k
Q510
Q511
Q502
R507 820
D513
R501 4.7k
R502 4.7k
R506 2.2k
R580 2.2k
D502,577 ISS133
D502
C580 2.2/50V
[PM CONTROL BOARD]
D577
R504 680
C501 0.0022
R503 330
IC501
IC501 TC9310N-001
MECHANISM CONTROL
TIMER
REV
FWD
REC
PM1
PM2
FWD-REV FF
REW
LINE MUTE
REC MUTE
BIAS
AMS
MOTOR CONTROL
INPUT
RESET
REW
REV
STOP
FWD
FF
PAUSE
REC
REC MUTE
GND
OSC
SHUT OFF
AMS gets released when the level of the signal at this terminal changes from H to L.
C503 1/50V
R516 100k
Q507
Q507 2SA1175
BUFFER
R582 47k
D582
C582 100/6.3V
R517 22k
R515 51k
C505 0.0047
D583
D582,583 ISS133
D584 ISS133
R583 56k
D584
IC563 TC4081
BS DET
CHANGING DIRECTION
IC566 TC4011
AMS DIRECTION CONTROL
D566–571 ISS133
R572 12k
D569
R571 12k
D568
D567
R569 12k
D566
D570
D571
IC566
R520 1k
R521 560
R524 1k
R539 1k
R526 1k
R522 1k
C502 1/50V
C506 50V
C513 0.01
C507 50V
C508 0.01
C509 50V
C510 0.01
C511 0.01
C512 0.01
IC561 TC4069
C583 50V
C560 47/10V
CLOCK OSC
IC561(1/4)
R561 27k
R562 120k
R563 27k
IC560
TIMING CONTROL
D576 ISS133
D576
IC569(1/2)
IC569 TC4001
BLANK SKIP
IC560 TC4024
TIMING CONTROL
IC570
IC571
IC565(1/3)
[BLANK SWITCH BOARD]
S570 BLANK SKIP
ON OFF
IC563(1/3)
IC561(1/4)
IC565(1/3)
IC567(1/3)
R566 12k
D563
IC568(1/2)
R565 510k
D575
C562 2.2 50V
R567 12k
C563 2.2/50V
D564
D563,564,575 ISS133
IC565 TC4023
MODE DET
AMS control
H
C590 0.01
IC564(1/3)
IC562(1/3)
IC562 TC4001
IC564 TC4011
REVERSE MODE CHANG
D572 ISS133
D572
D565
D565 ISS133
R568 12k
C564 0.01
R575 1M
Since pins (3) and (4) of IC565 are both
both the ▶ and ◀◀ buttons are pressed, A
cleared when the state of pin (5) changes
(With signal input) to H (With no signal i

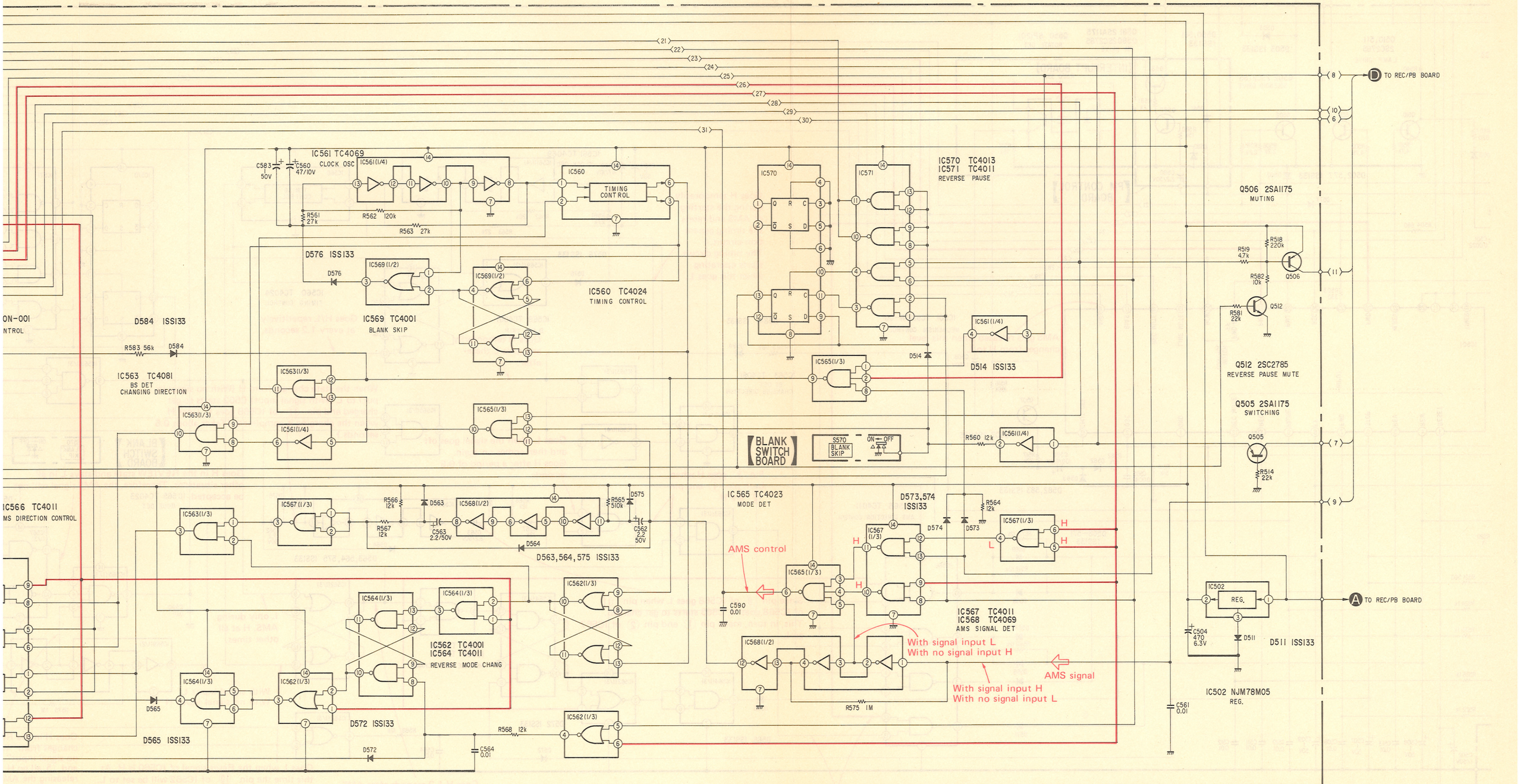

Since pins (3) and (4) of IC565 are both H when both the ▶ and ◀◀ buttons are pressed, AMS gets cleared when the state of pin (5) changes from L (With signal input) to H (With no signal input).

BLANK SKIP OPERATION

This function fast forwards the tape to the beginning of the next song in the tape if the no signal state continues for ten seconds. [During the fast forwarding, the operation will be FWD AMS (▶+▶▶)]

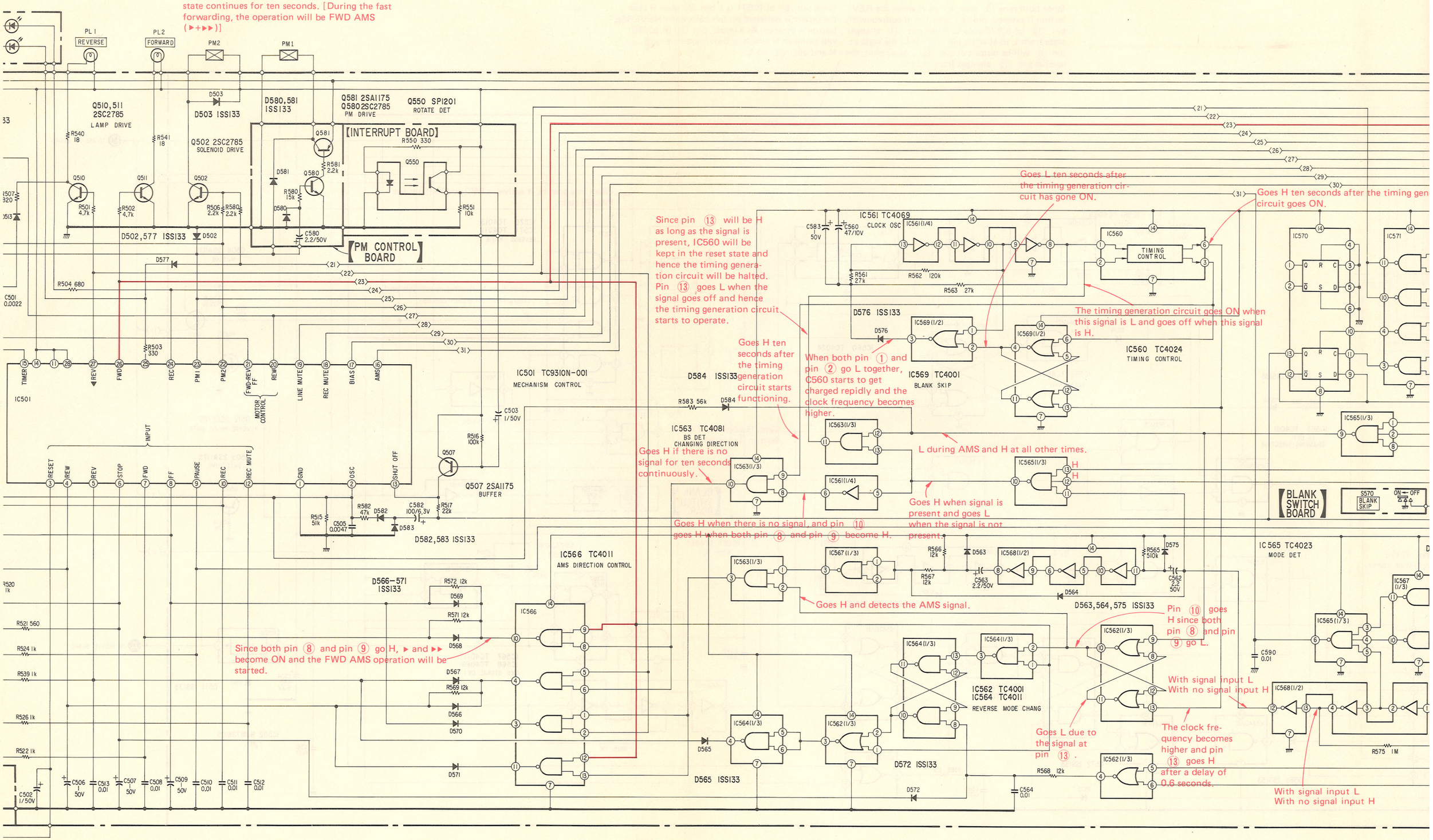

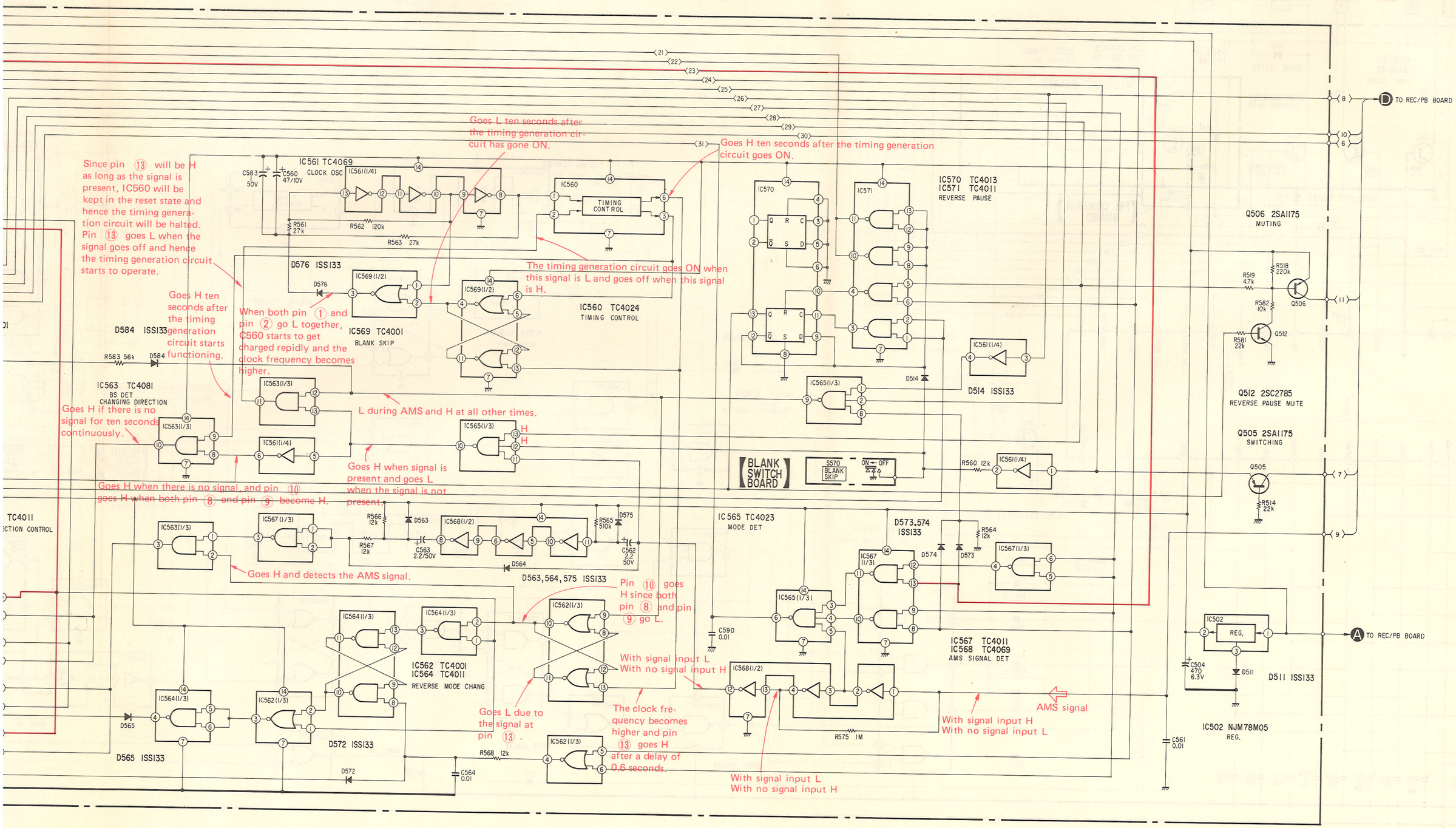
Goes L ten seconds after the timing generation circuit has gone ON.
Goes H ten seconds after the timing generation circuit goes ON.
Since pin ⑬ will be H as long as the signal is present, IC560 will be kept in the reset state and hence the timing generation circuit will be halted. Pin ⑬ goes L when the signal goes off and hence the timing generation circuit starts to operate.
IC561 TC4069
CLOCK OSC
IC560
TIMING CONTROL
IC570 TC4013
IC571 TC4011
REVERSE PAUSE
Q506 2SA1175
MUTING
D576 ISS133
The timing generation circuit goes ON when this signal is L and goes off when this signal is H.
Goes H ten seconds after the timing generation circuit starts functioning.
When both pin ① and pin ② go L together, C560 starts to get charged repidly and the clock frequency becomes higher.
IC569 TC4001
BLANK SKIP
IC560 TC4024
TIMING CONTROL
D584 ISS133
IC563 TC4081
BS DET
CHANGING DIRECTION
Goes H if there is no signal for ten seconds continuously.
L during AMS and H at all other times.
D514 ISS133
Q512 2SC2785
REVERSE PAUSE MUTE
Q505 2SA1175
SWITCHING
BLANK SWITCH BOARD
S570 BLANK SKIP
Goes H when signal is present and goes L when the signal is not present.
Goes H when there is no signal, and pin ⑩ goes H when both pin ⑧ and pin ⑨ become H.
TC4011
ECTION CONTROL
IC565 TC4023
MODE DET
D573,574 ISS133
Goes H and detects the AMS signal.
D563,564,575 ISS133
Pin ⑩ goes H since both pin ⑧ and pin ⑨ go L.
IC567 TC4011
IC568 TC4069
AMS SIGNAL DET
IC562 TC4001
IC564 TC4011
REVERSE MODE CHANG
With signal input L
With no signal input H
Goes L due to the signal at pin ⑬.
The clock frequency becomes higher and pin ⑬ goes H after a delay of 0.6 seconds.
AMS signal
With signal input H
With no signal input L
With signal input L
With no signal input H
D565 ISS133
D572 ISS133
IC502 NJM78M05
REG.
D511 ISS133
TO REC/PB BOARD
TO REC/PB BOARD

REVERSE PAUSE

Since both pins (5) and (6) go H when the REV button is pressed, pin (4) goes L and consequently pin (10) of IC570 goes L. When pin (11) changes state from L to H while pin (10) is L, the state at pin (9) will be output at pin (13). As a result, the level at pin (12) changes from H to L.

Since pin (6) of IC571 is L pin (4) goes H after the power is switched on but before the REVERSE button is pressed. As a result, pin (10) of IC570 will be made H which in turn makes pin (12) go H and pin (13) go L.

When this PAUSE st

Goes H when the PAUSE button is pressed.

PL1 REVERSE
PL2 FORWARD
PM2
PM1

Q510,511 2SC2785 LAMP DRIVE
Q502 2SC2785 SOLENOID DRIVE
D503 ISS133
D580,581 ISS133
Q581 2SA1175
Q5802SC2785 PM DRIVE
Q550 SPI201 ROTATE DET

【INTERRUPT BOARD】
【PM CONTROL BOARD】

D502,577 ISS133

IC501 TC9310N-001 MECHANISM CONTROL

IC501 INPUT: RESET, REW, REV, STOP, FWD, FF, PAUSE, REC, REC MUTE, GND, OSC, SHUT OFF

OUTPUT: TIMER, REV, FWD, REC, PM1, PM2, FWD-REV FF, REW, LINE MUTE, REC MUTE, BIAS, AMS

MOTOR CONTROL

Q507 2SA1175 BUFFER

D582,583 ISS133

IC566 TC4011 AMS DIRECTION CONTROL

D566–571 ISS133

D584 ISS133

IC563 TC4081 BS DET CHANGING DIRECTION

D565 ISS133

IC561 TC4069 CLOCK OSC

IC560 TIMING CONTROL

IC560 TC4024 TIMING CONTROL

D576 ISS133

IC569 TC4001 BLANK SKIP

D572 ISS133

IC562 TC4001 IC564 TC4011 REVERSE MODE CHANG

D563,564,575 ISS133

IC570

IC571

IC565 TC4023 MODE DET

【BLANK SWITCH BOARD】

S570 BLANK SKIP ON—OFF

Since both pins (5) and (6) go H when the REV button is pressed, pin (4) goes L and consequently pin (10) of IC570 goes L. When pin (11) changes state from L to H while pin (10) is L, the state at pin (9) will be output at pin (13). As a result, the level at pin (12) changes from H to L.

Since pin (6) of IC571 is L pin (4) goes H after the power is switched on but before the REVERSE button is pressed. As a result, pin (10) of IC570 will be made H which in turn makes pin (12) go H and pin (13) go L.

When this goes H, it activates PM2 and initiates the PAUSE state.

Goes L only during operation and stays H at all other times.

Goes H when the PAUSE button is pressed.

IC561 TC4069 CLOCK OSC

C583 50V

C560 47/10V

IC561(1/4)

R561 27k

R562 120k

R563 27k

IC560 TIMING CONTROL

IC570 TC4013
IC571 TC4011
REVERSE PAUSE

D576 ISS133

IC569(1/2)

D576

IC560 TC4024
TIMING CONTROL

IC569 TC4001
BLANK SKIP

D584 ISS133

R583 56k

D584

IC563 TC4081
BS DET
CHANGING DIRECTION

IC563(1/3)

IC561(1/4)

IC565(1/3)

D514

D514 ISS133

IC561(1/4)

Q506 2SA1175
MUTING

R518 220k

R519 47k

Q506

R582 10k

Q512

R581 22k

Q512 2SC2785
REVERSE PAUSE MUTE

Q505 2SA1175
SWITCHING

Q505

R514 22k

TO REC/PB BOARD

BLANK SWITCH BOARD

S570 BLANK SKIP

ON — OFF

R560 12k

IC566 TC4011
AMS DIRECTION CONTROL

IC563(1/3)

IC567(1/3)

R566 12k

D563

IC568(1/2)

R565 510k

D575

R567 12k

C563 2.2/50V

C562 2.2 50V

D564

D563,564,575 ISS133

IC565 TC4023
MODE DET

D573,574 ISS133

D574

D573

R564 12k

IC567 (1/3)

IC565(1/3)

C590 0.01

IC567 TC4011
IC568 TC4069
AMS SIGNAL DET

IC564(1/3)

IC562(1/3)

IC562 TC4001
IC564 TC4011
REVERSE MODE CHANG

IC568(1/2)

R575 1M

IC502

REG.

TO REC/PB BOARD

C504 470 6.3V

D511

D511 ISS133

IC502 NJM78M05
REG.

C561 0.01

D565

D565 ISS133

D572 ISS133

R568 12k

D572

C564 0.01

SWITCHING TO REV STATE WHEN TAPE END IS DETECTED DURING FWD AMS (▶+▶▶)

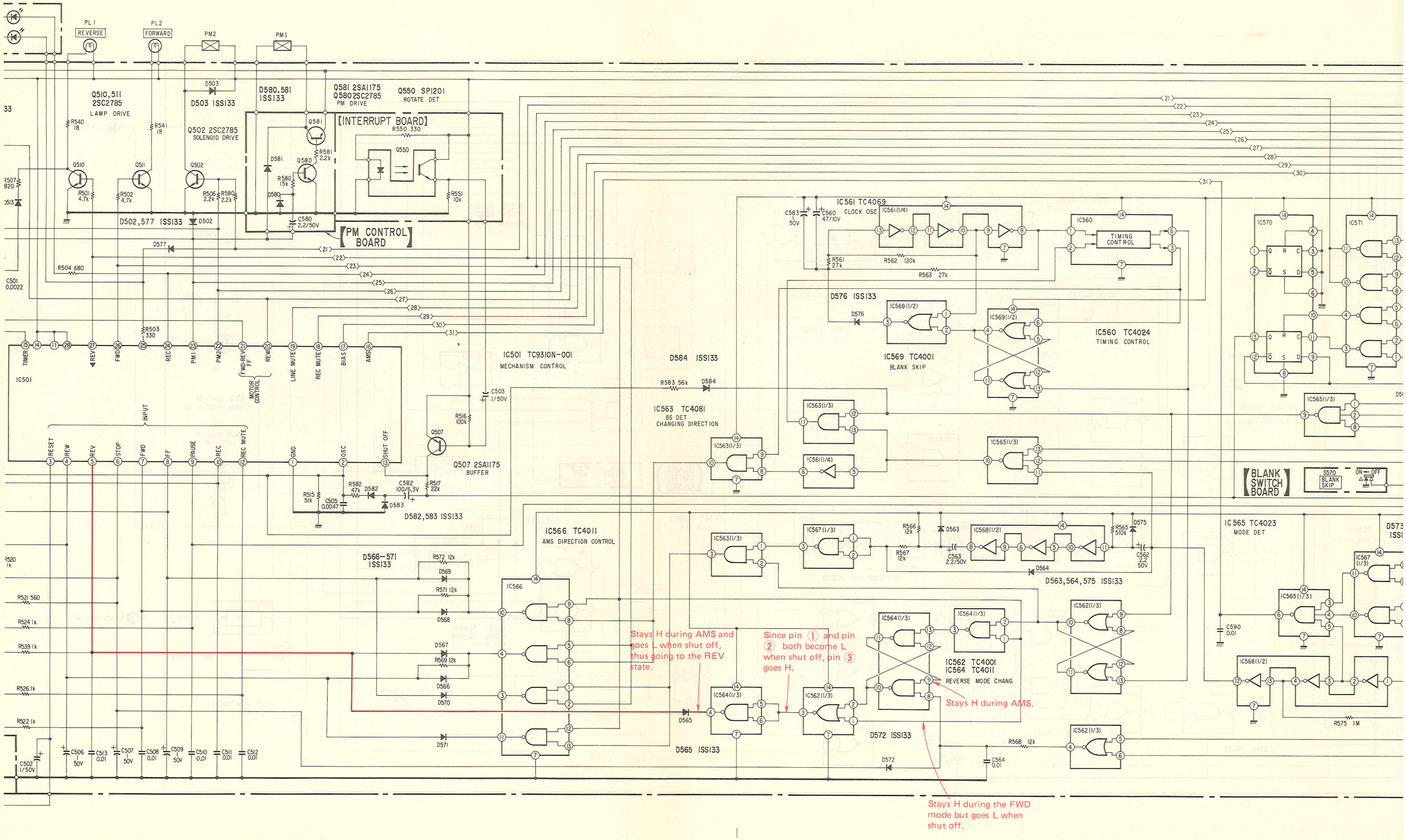

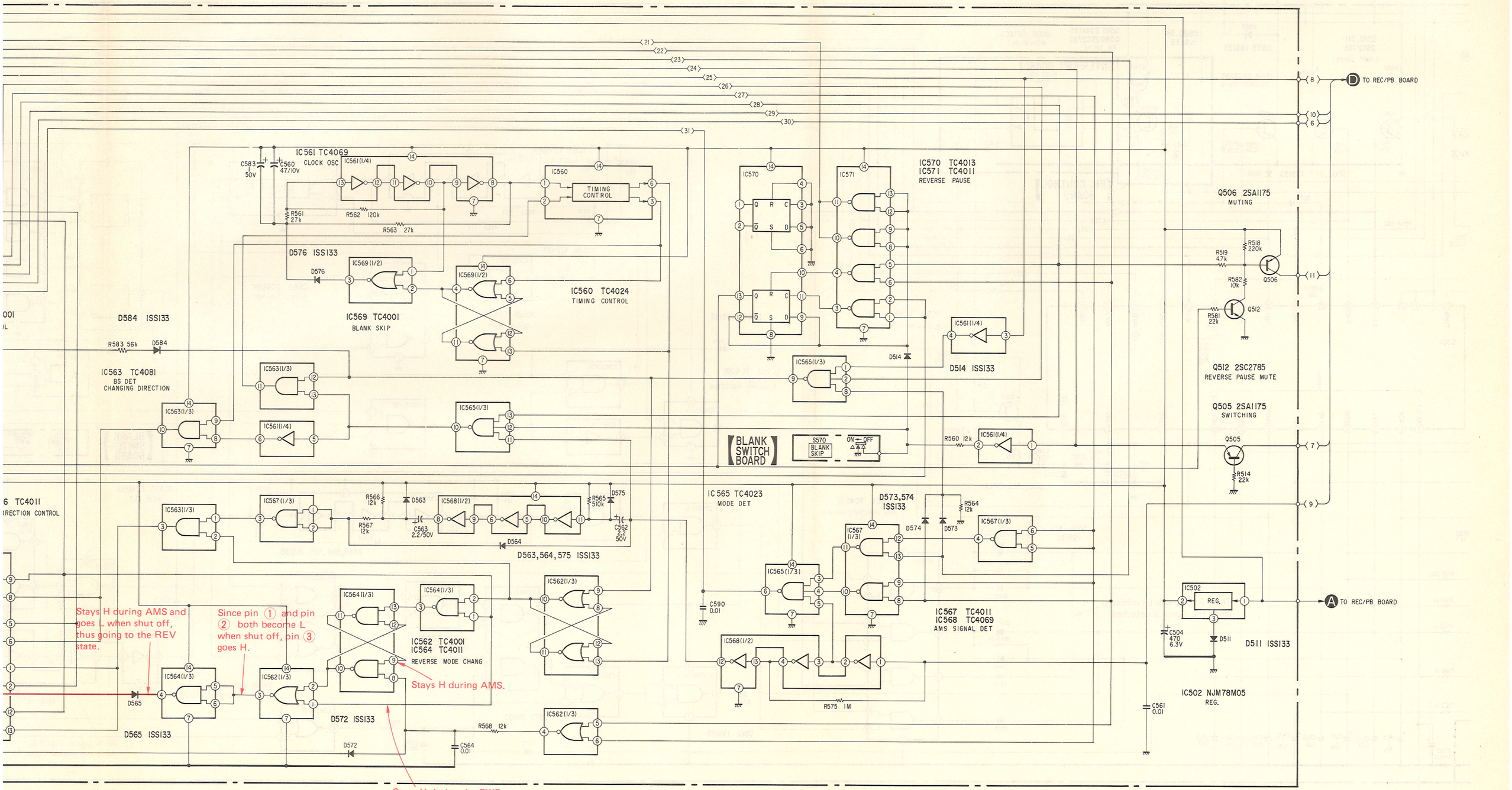
IC561 TC4069
CLOCK OSC
IC561(1/4)
C583 50V
C560 47/10V
R561 27k
R562 120k
R563 27k
IC560
TIMING CONTROL
IC560 TC4024
TIMING CONTROL
D576 ISS133
D576
IC569(1/2)
IC569 TC4001
BLANK SKIP
D584 ISS133
R583 56k
D584
IC563 TC4081
BS DET
CHANGING DIRECTION
IC563(1/3)
IC561(1/4)
IC565(1/3)
IC570
IC571
IC570 TC4013
IC571 TC4011
REVERSE PAUSE
D514
D514 ISS133
IC561(1/4)
【BLANK SWITCH BOARD】
S570 BLANK SKIP
ON OFF
R560 12k
IC561(1/4)
Q506 2SA1175
MUTING
R518 220k
R519 4.7k
R582 10k
Q506
Q512
R581 22k
Q512 2SC2785
REVERSE PAUSE MUTE
Q505 2SA1175
SWITCHING
Q505
R514 22k
TO REC/PB BOARD
8
10
6
11
7
9
IC563(1/3)
IC567(1/3)
R566 12k
D563
IC568(1/2)
R565 510k
D575
R567 12k
C563 2.2/50V
C562 2.2 50V
D564
D563,564,575 ISS133
IC565 TC4023
MODE DET
D573,574 ISS133
R564 12k
D574
D573
IC567(1/3)
IC565(1/3)
C590 0.01
IC567 TC4011
IC568 TC4069
AMS SIGNAL DET
IC568(1/2)
R575 1M
IC562(1/3)
IC564(1/3)
IC562 TC4001
IC564 TC4011
REVERSE MODE CHANG
Stays H during AMS and goes L when shut off, thus going to the REV state.
Since pin ① and pin ② both become L when shut off, pin ③ goes H.
Stays H during AMS.
D565
D565 ISS133
D572 ISS133
D572
R568 12k
C564 0.01
Stays H during the FWD mode but goes L when shut off.
IC502
REG.
C504 470 6.3V
D511
D511 ISS133
IC502 NJM78M05
REG.
C561 0.01
TO REC/PB BOARD
21
22
23
24
25
26
27
28
29
30
31

REV AMS (▶+▶▶)

The signal detection in AMS in the same as in FWD AMS (▶+▶▶).

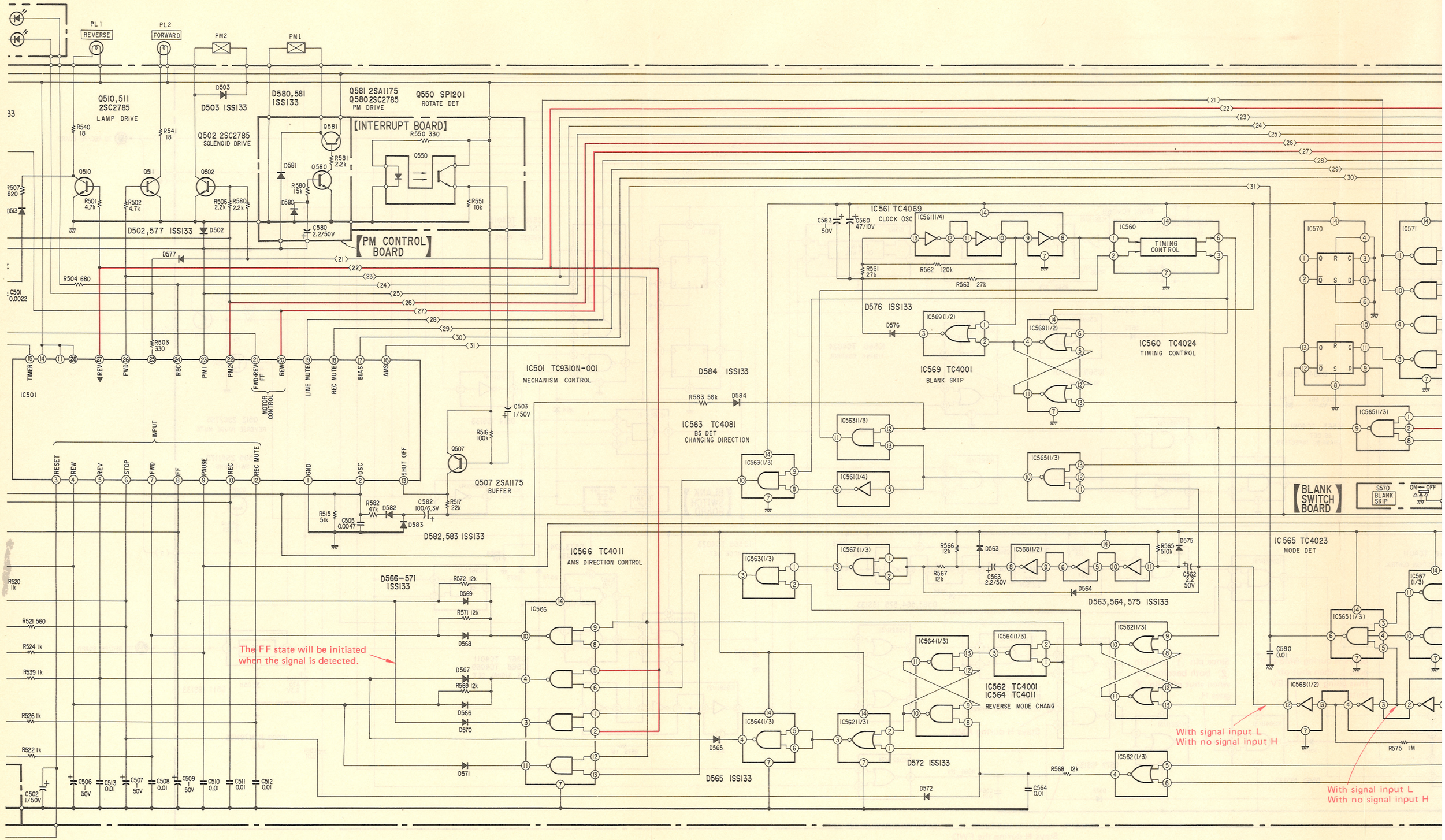

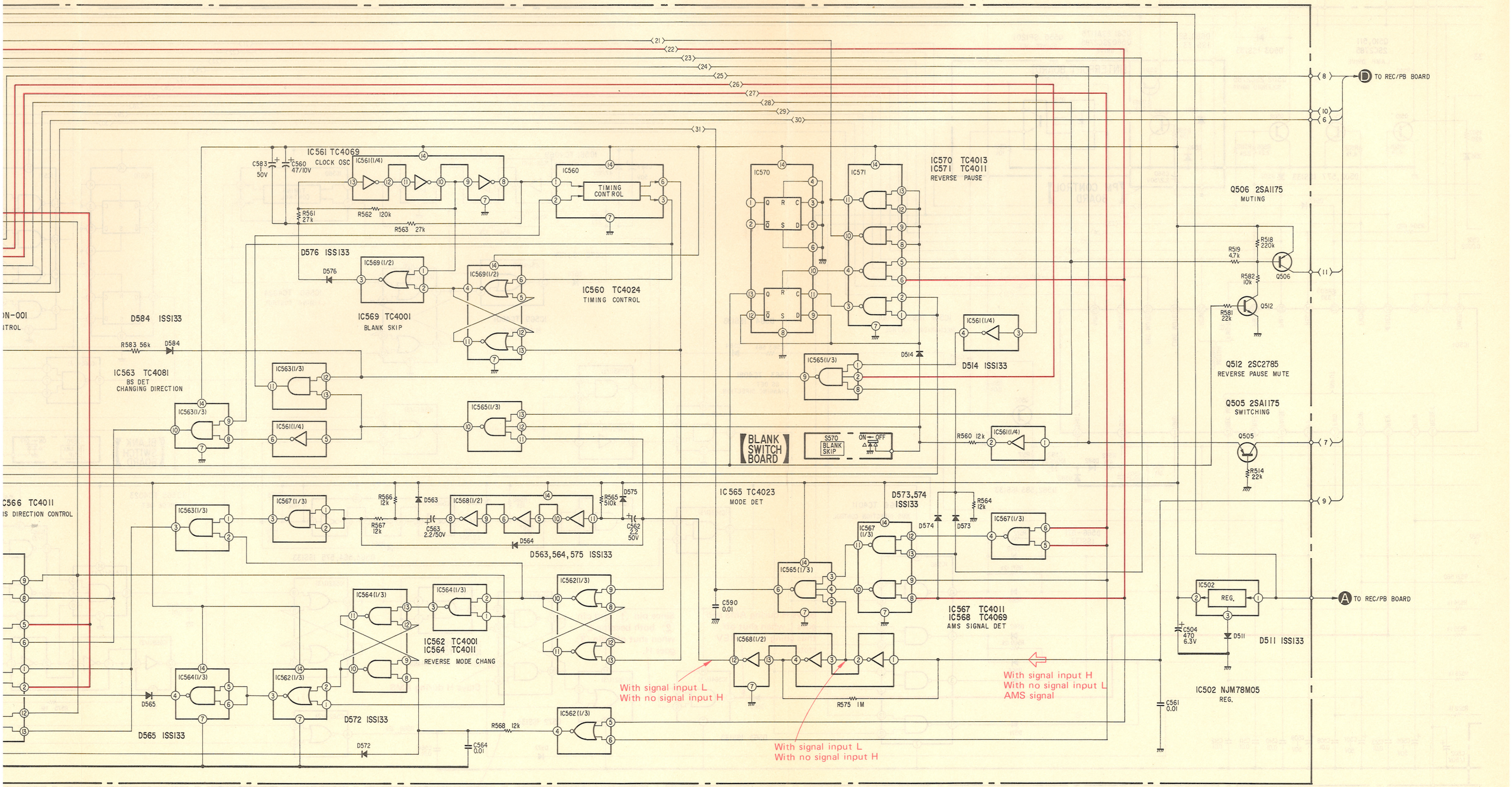
IC561 TC4069
CLOCK OSC
C583 50V
C560 47/10V
IC561(1/4)
R561 27k
R562 120k
R563 27k
IC560
TIMING CONTROL
IC560 TC4024
TIMING CONTROL
D576 ISS133
D576
IC569(1/2)
IC569 TC4001
BLANK SKIP
D584 ISS133
R583 56k
D584
IC563 TC4081
BS DET
CHANGING DIRECTION
IC563(1/3)
IC561(1/4)
IC565(1/3)
IC570 TC4013
IC571 TC4011
REVERSE PAUSE
IC570
IC571
D514
D514 ISS133
IC561(1/4)
BLANK SWITCH BOARD
S570 BLANK SKIP
ON — OFF
R560 12k
IC561(1/4)
Q506 2SA1175
MUTING
R518 220k
R519 4.7k
R582 10k
Q506
Q512
R581 22k
Q512 2SC2785
REVERSE PAUSE MUTE
Q505 2SA1175
SWITCHING
Q505
R514 22k
TO REC/PB BOARD
8
10
6
11
7
9
21
22
23
24
25
26
27
28
29
30
31
C566 TC4011
IS DIRECTION CONTROL
IC563(1/3)
IC567(1/3)
R566 12k
D563
R567 12k
C563 2.2/50V
IC568(1/2)
D564
R565 510k
D575
C562 2.2 50V
D563,564,575 ISS133
IC565 TC4023
MODE DET
D573,574 ISS133
R564 12k
D574
D573
IC567 (1/3)
IC565(1/3)
C590 0.01
IC567 TC4011
IC568 TC4069
AMS SIGNAL DET
IC564(1/3)
IC562(1/3)
IC562 TC4001
IC564 TC4011
REVERSE MODE CHANG
D565
D565 ISS133
D572 ISS133
D572
R568 12k
C564 0.01
With signal input L
With no signal input H
With signal input H
With no signal input L
AMS signal
With signal input L
With no signal input H
R575 1M
IC502
REG.
C504 470 6.3V
D511
D511 ISS133
IC502 NJM78M05
REG.
C561 0.01
TO REC/PB BOARD

1-4. MECHANISM OPRATION

The mechanism of this deck provides selection of different modes by kicking the FWD cam gear and FF cam gear by the solenoid coils (PM1, PM2) to engage them with the drive gear (T) and turn.
The drive gear (T) is driven by the flywheel that is engaged with the pinion secured to the flywheel. The various different modes are described below.

1. KICKING FUNCTION FOR FWD CAM GEAR, FF CAM GEAR WHEN CURRENT IS FLOWING THROUGH SOLENOID

The magnet is turned in a clockwise direction by the magnetic force generated by the solenoid coil. Since the magnet turns, the FWD cam gear and FF cam gear that are integrated with the magnet are kicked in the direction indicated by the arrow, to engage the drive gear (T). When the drive gear (T) turns, the FWD cam gear and FF cam gear turn one time, and the cutaway sections of these gear cause them to disengage from the drive gear (T).

KICK OPERATION OF CAM GEAR

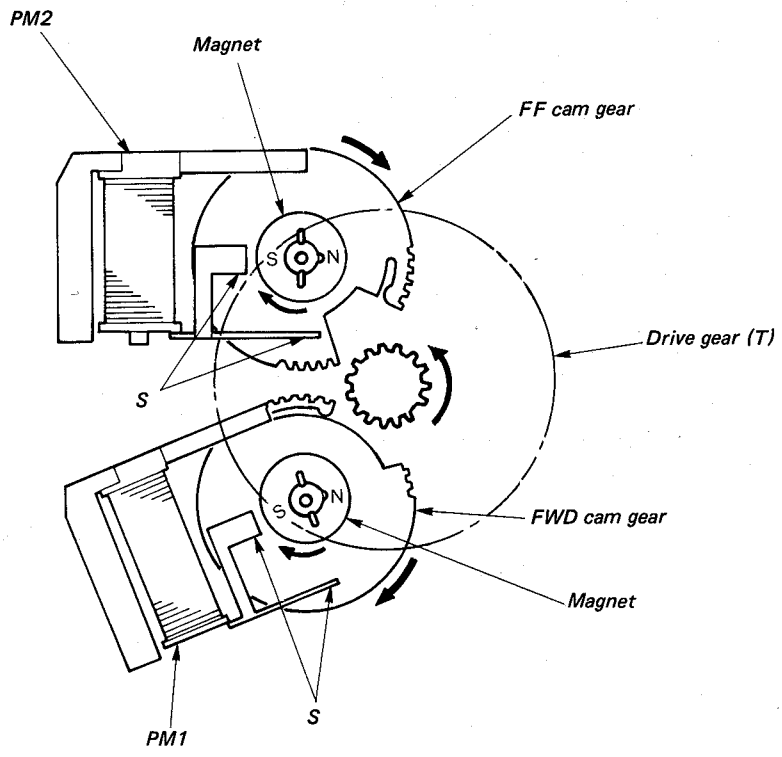

2. FAST-REVERSE MODE

- **TIMING OF IC501**

  STOP → FAST-REVERSE

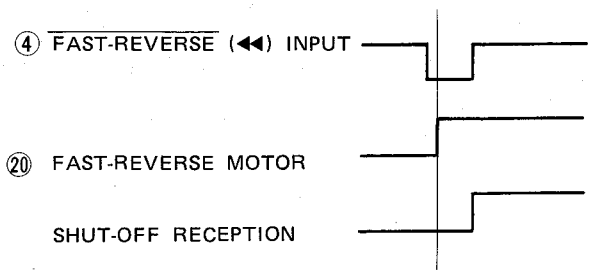

FAST-REVERSE OPERATION

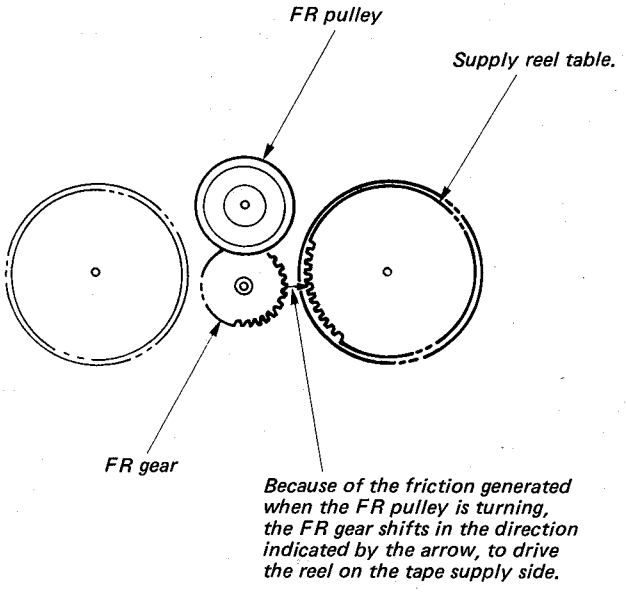

3. FF MODE

- **TIMING OF IC501**

  STOP → FF

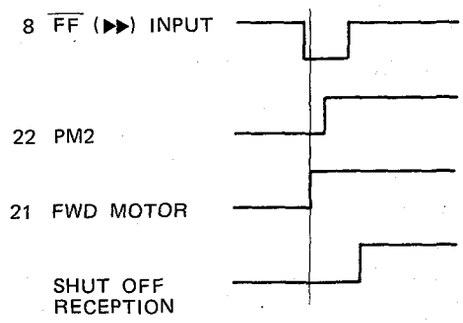

FF OPERATION (1)

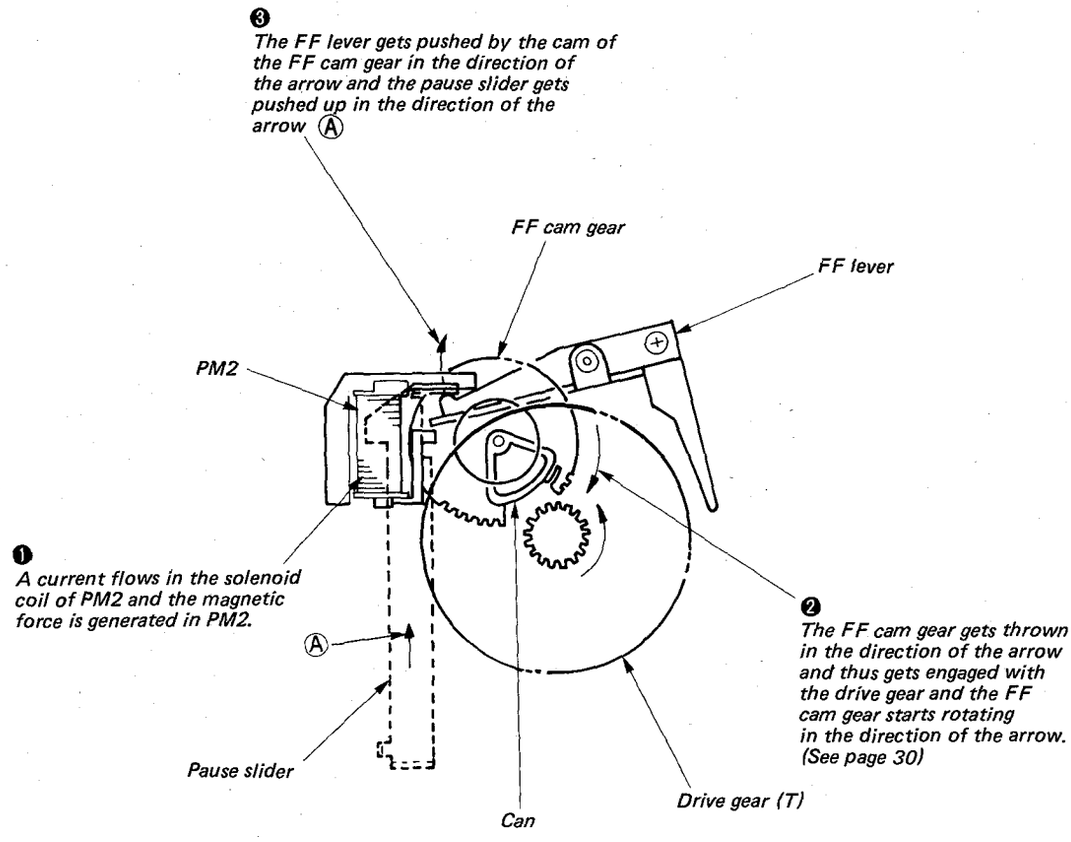

FF OPERATION (2)

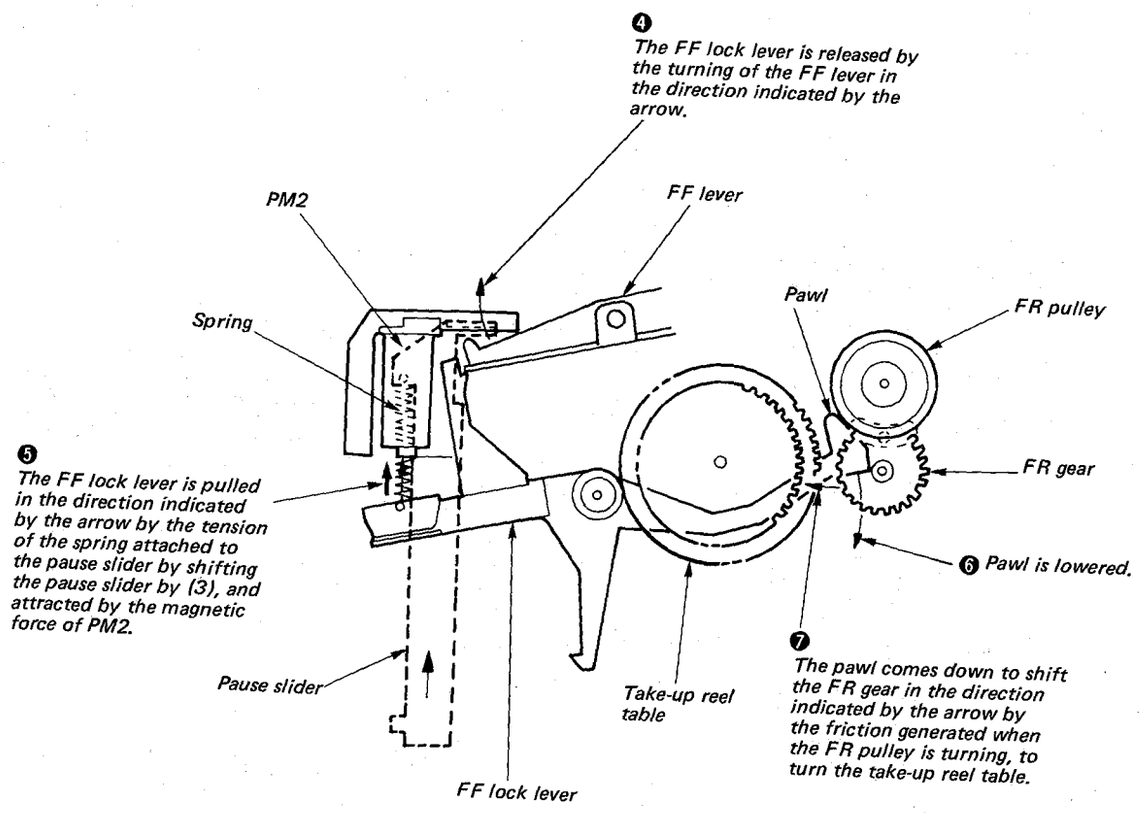

4. FWD MODE

- **TIMING OF IC501**

STOP → FWD

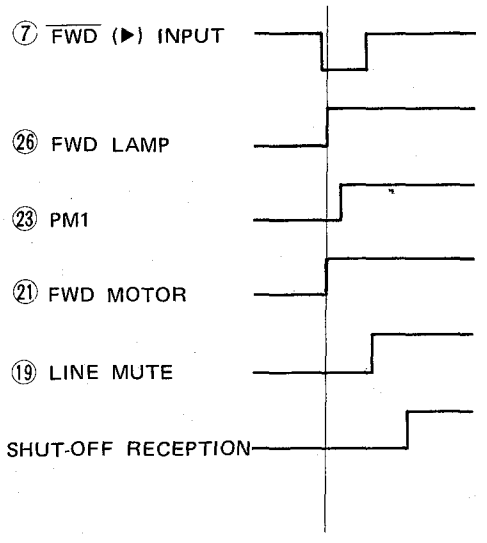

FWD OPERATION (1)

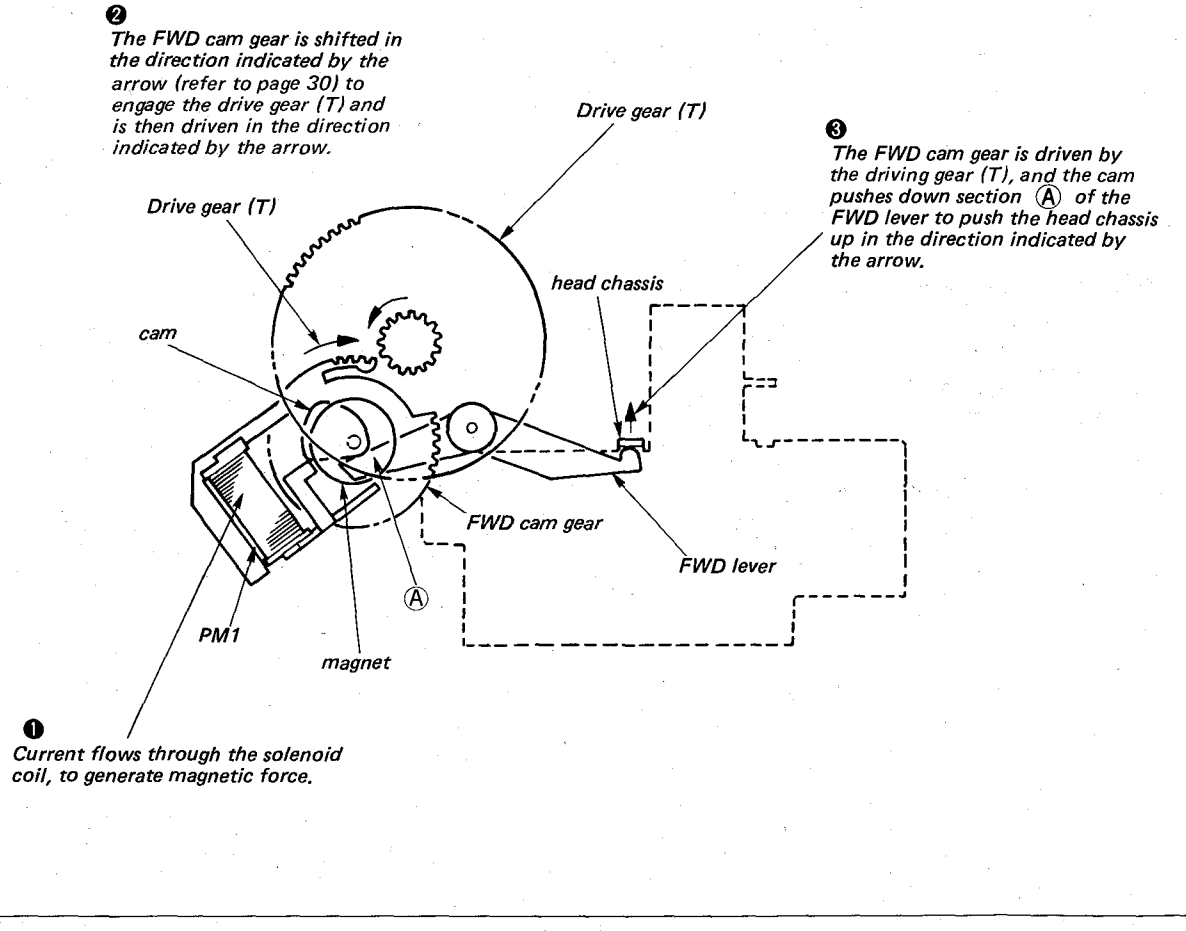

FWD OPERATION (2)

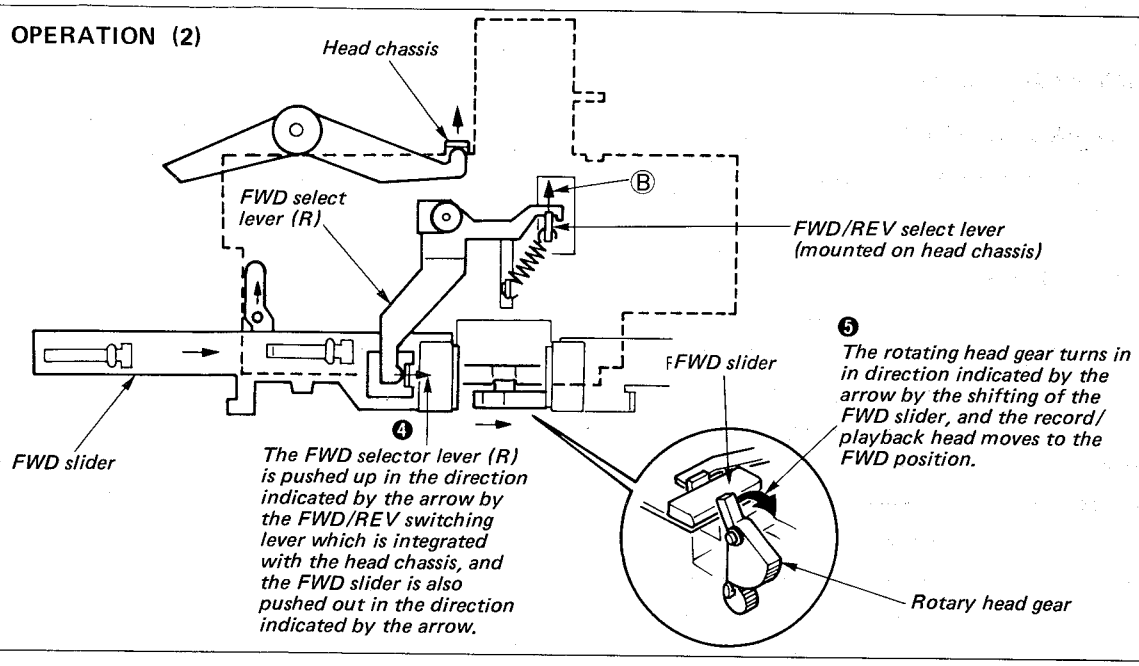

FWD OPERATION (3)

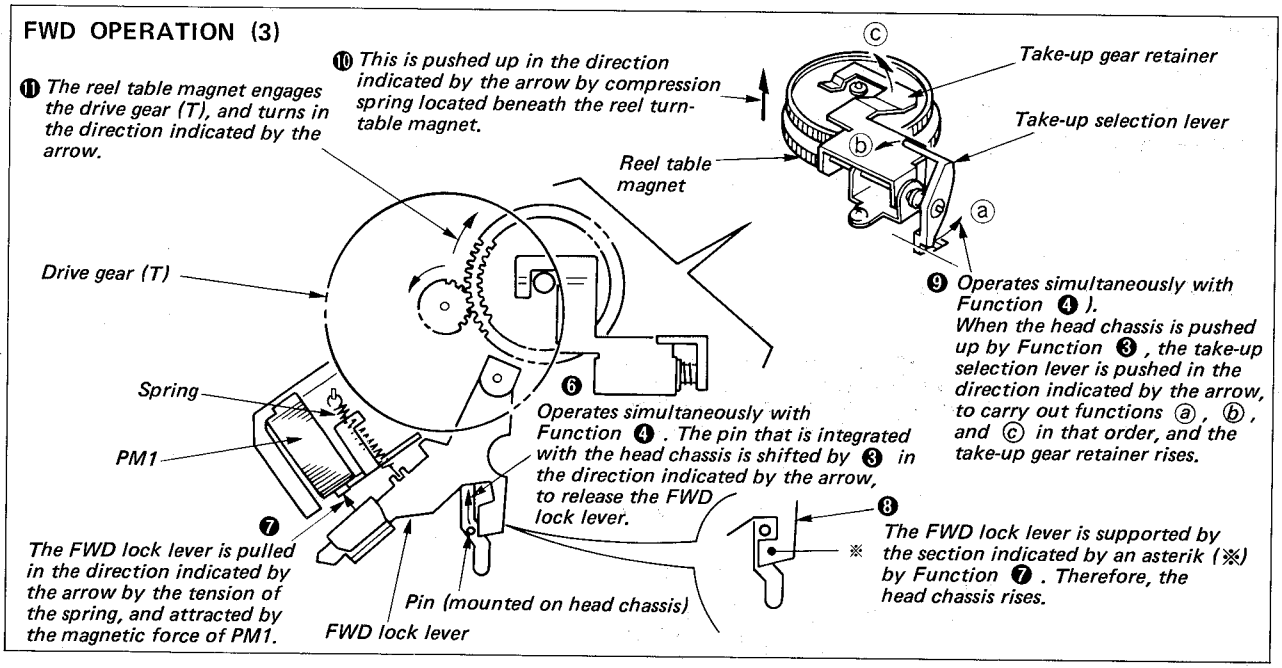

FWD OPERATION (4)

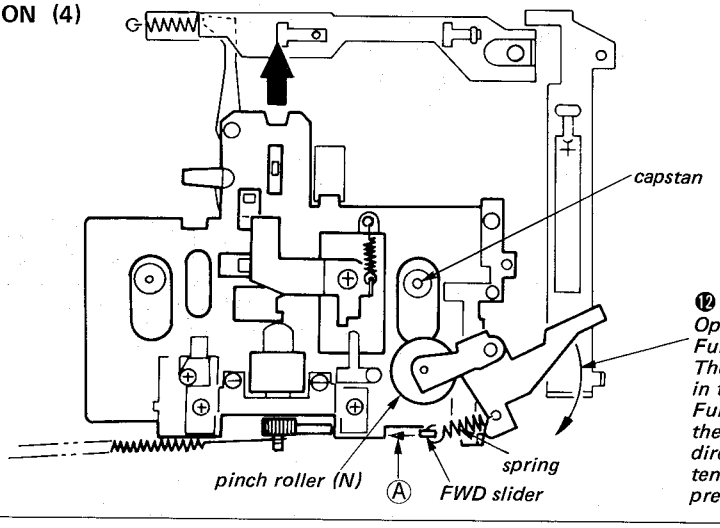

5. FWD PAUSE MODE

- **TIMING OF IC501**

FWD ⟷ FWD PAUSE

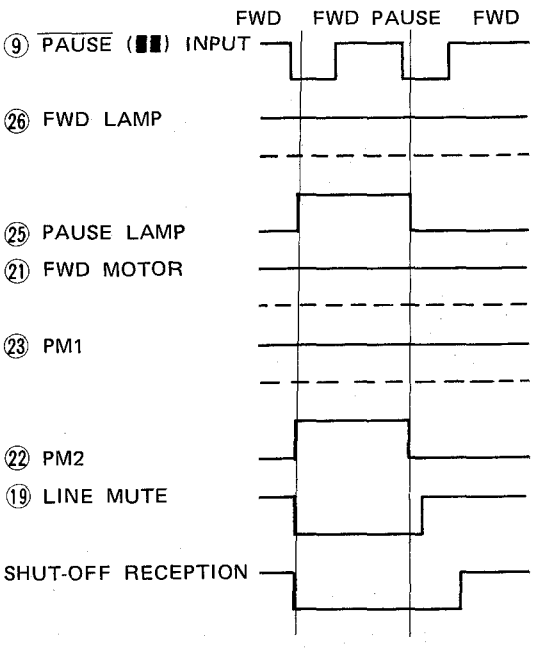

FWD PAUSE OPERATION (1)

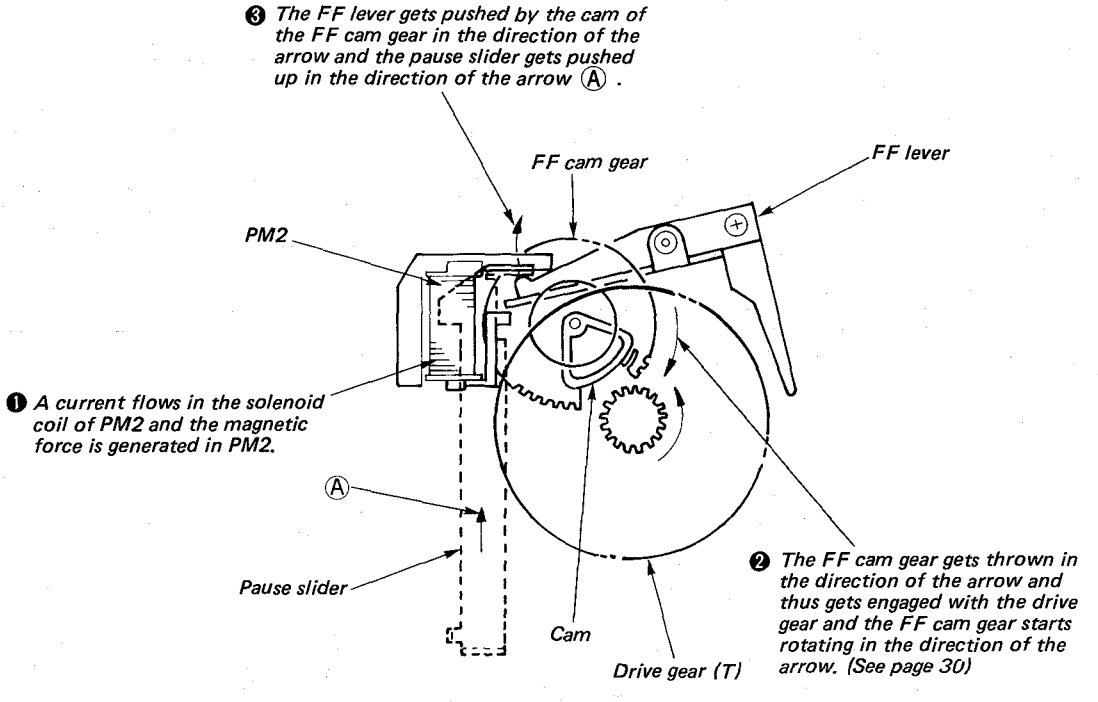

FWD PAUSE OPERATION (2)

❺ *The take-up gear retainer is pressed in the direction of the arrow Ⓑ by the section of the FF lever indicated by the asterik (※), and the reel table magent and the drive gear (T) are disengaged.*

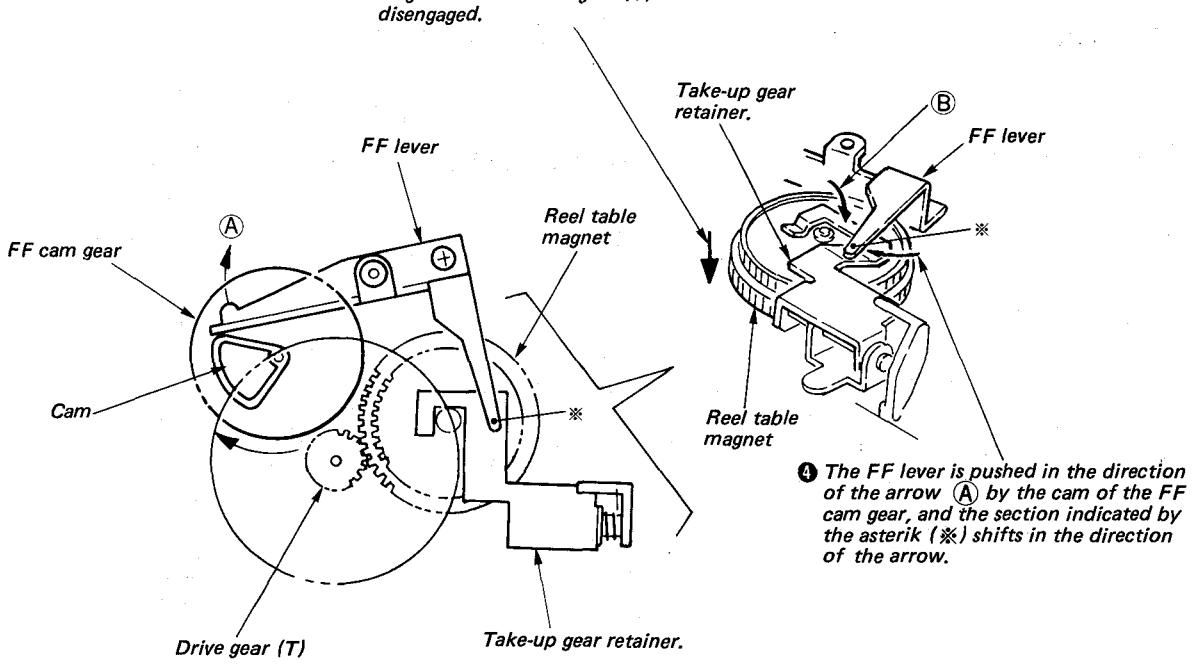

❹ *The FF lever is pushed in the direction of the arrow Ⓐ by the cam of the FF cam gear, and the section indicated by the asterik (※) shifts in the direction of the arrow.*

FWD PAUSE OPERATION (3)

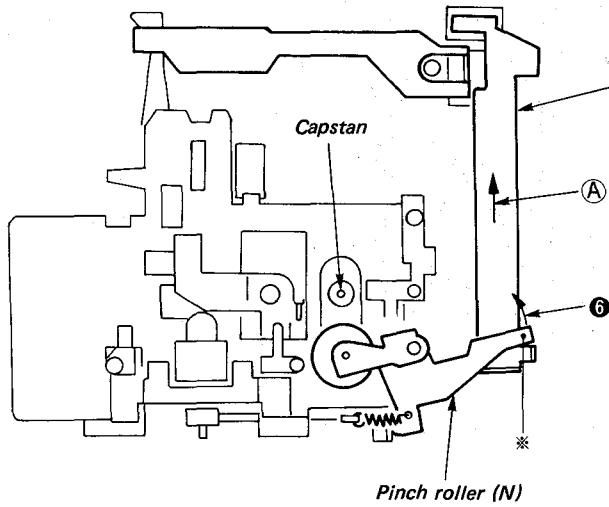

❻ *When the pause up in the direction of Ⓐ, the section of the pinch roller (N) indicated by the asterik (※) is pushed in the direction of the arrow, and the pinch roller (N) moves away from the capstan.*

6. REV MODE

- **TIMING OF IC501**

STOP → REVERSE

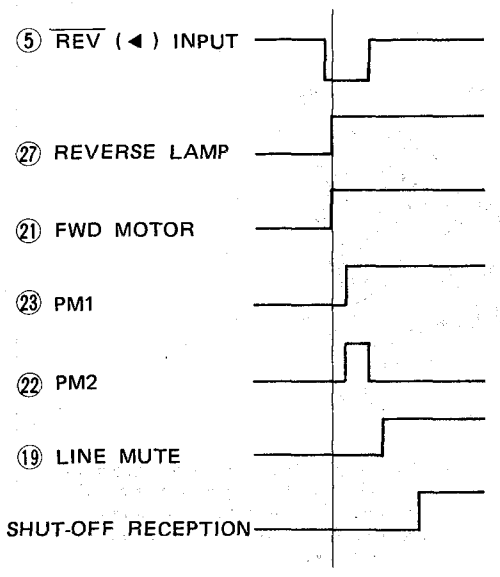

SHUT-OFF

FWD → REVERSE

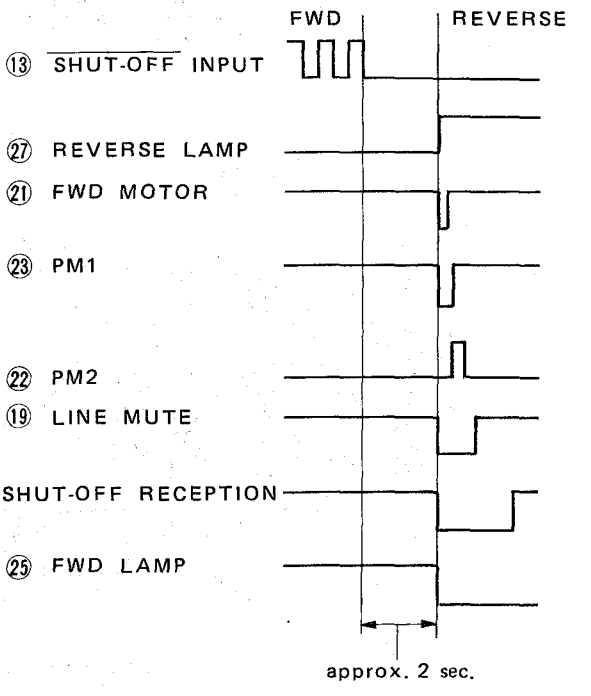

REVERSE OPERATION (1)

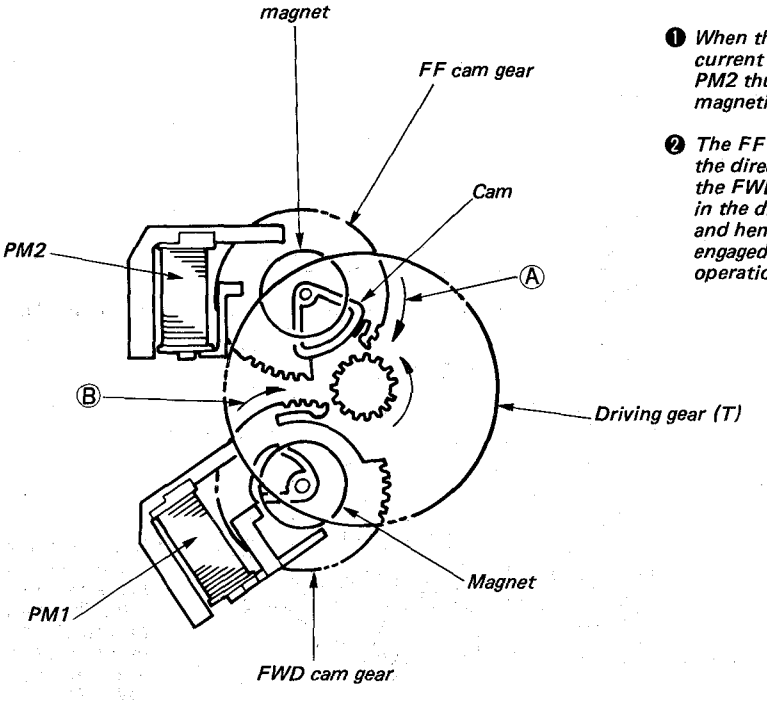

❶ *When the REV button is pressed, current flows in the coils PM1 and PM2 thus generating the respective magnetic fields.*

❷ *The FF cam gear will be thrown in the direction of the arrow Ⓐ and the FWD cam gear will be thrown in the direction of the arrow Ⓑ, and hence the drive gear will be engaged for the corresponding operation.*

REVERSE OPERATION (2)

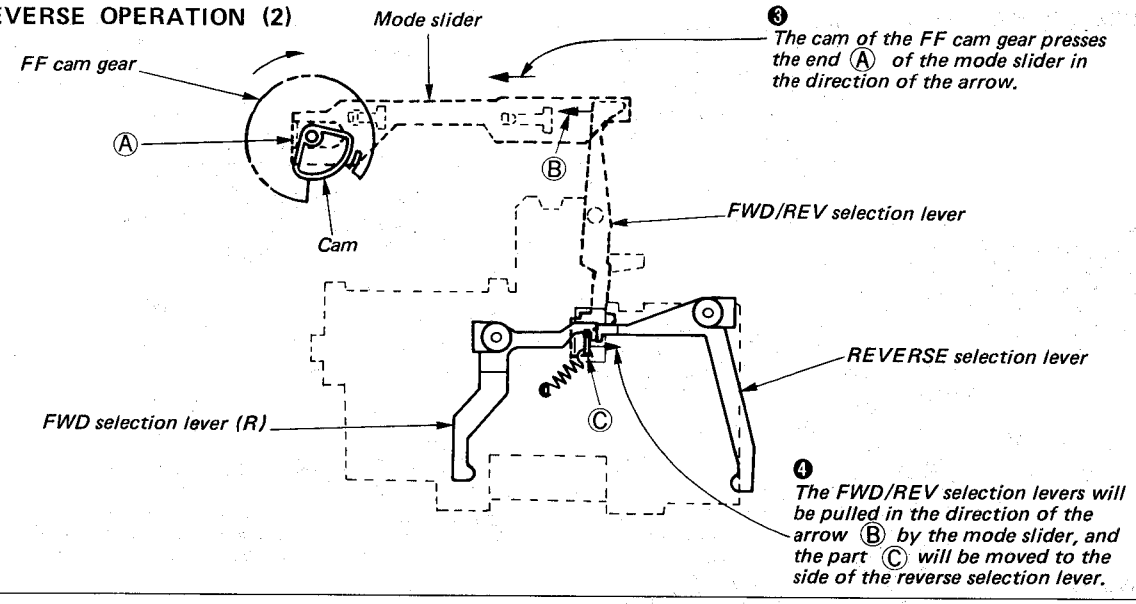

REVERSE OPERATION (3)

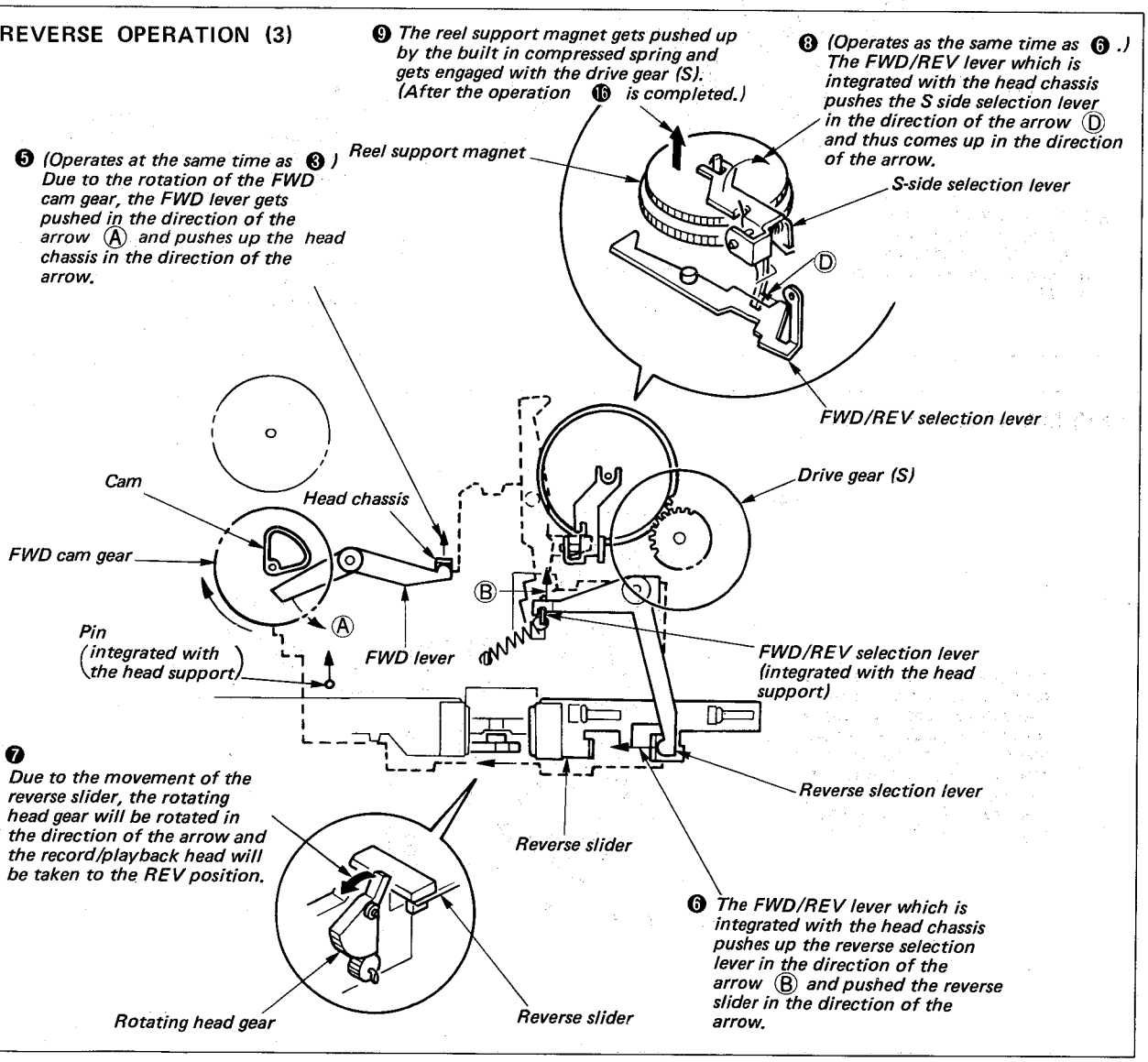

REVERSE OPERATION (4)

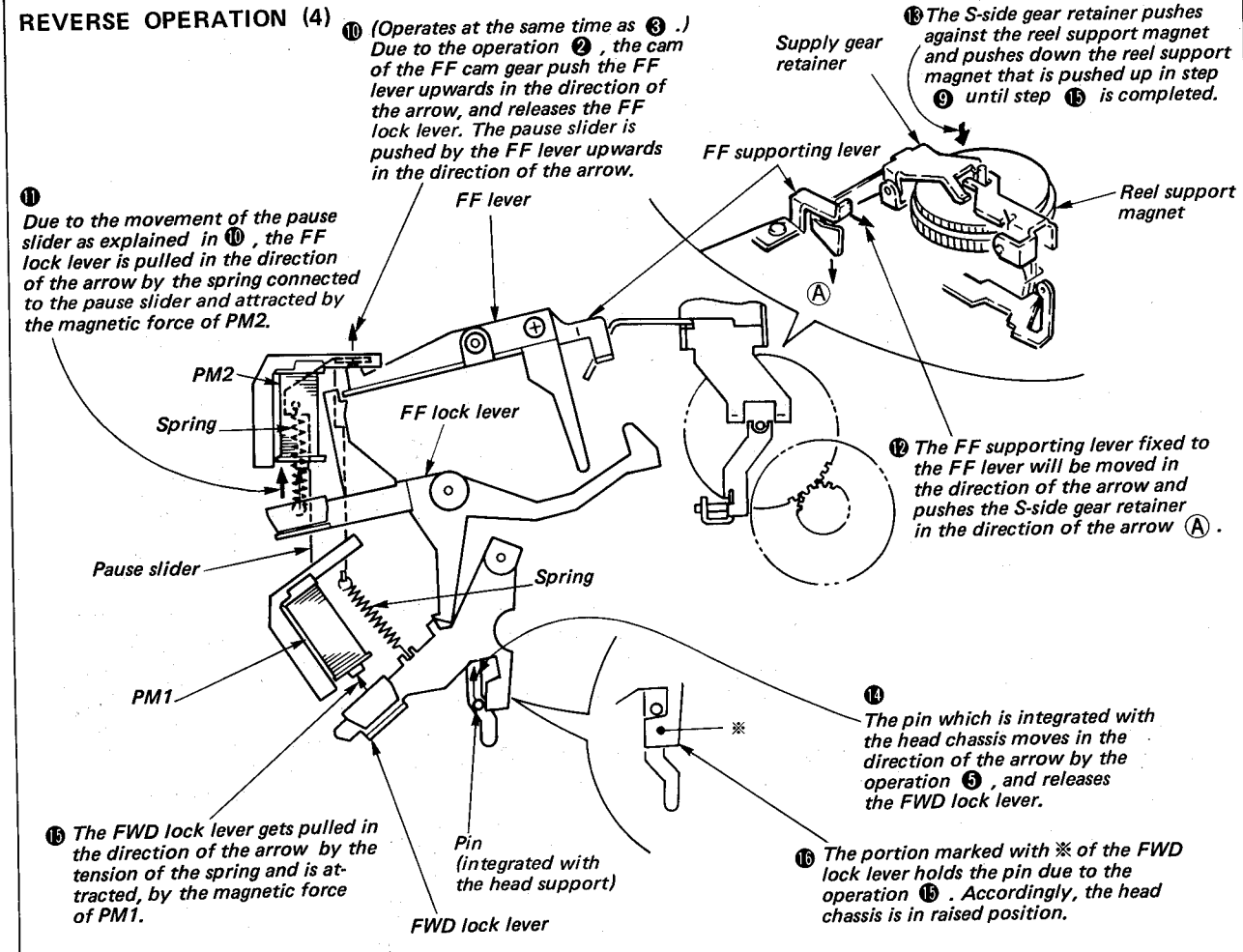

REVERSE OPERATION (5)

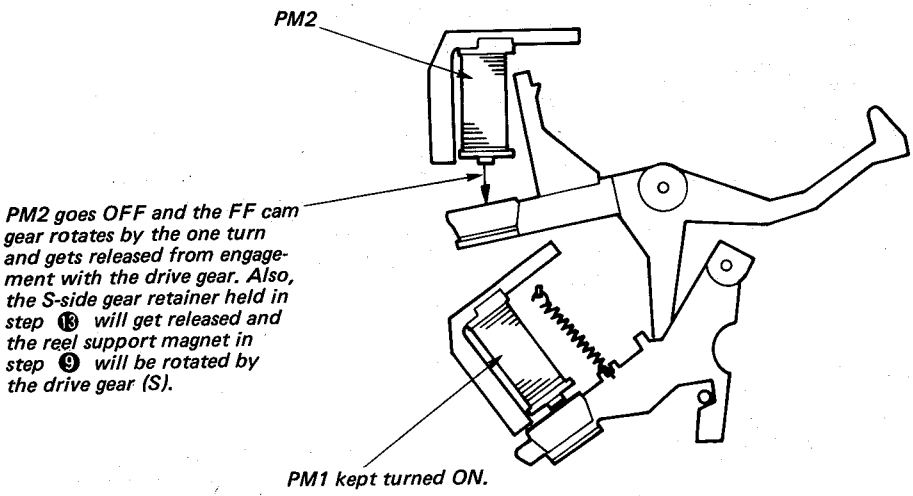

REVERSE OPERATION (6)

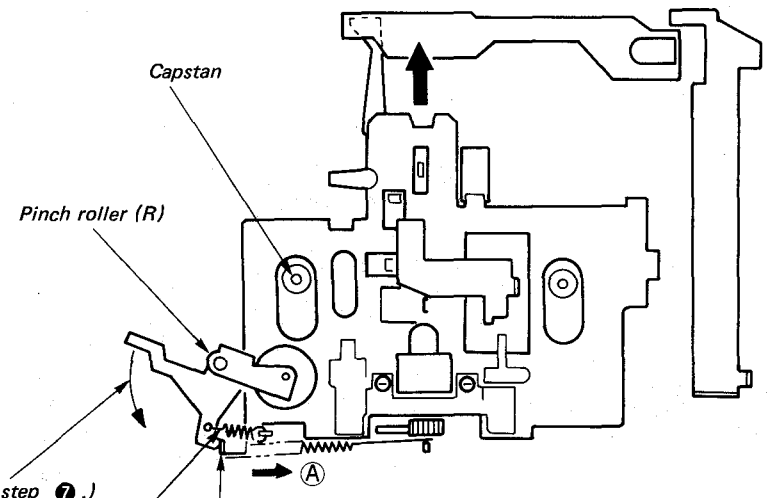

⓲
(Operates at the same time as step ❼.)
When the reverse slider moves in the direction Ⓐ in step ❻, the pinch roller (R) tilts in the direction of the arrow due to the tension force of the spring and presses against the capstan.

7. REV PAUSE MODE

When push the pause switch in REV mode.

PAUSE OPERATION

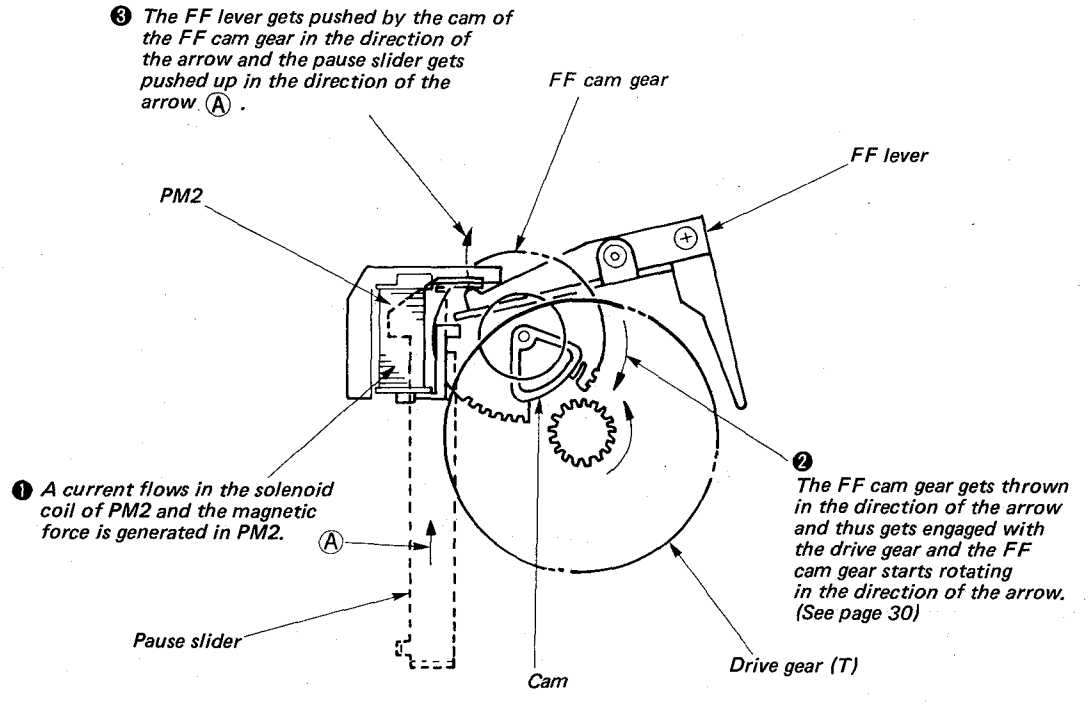

PAUSE OPERATION

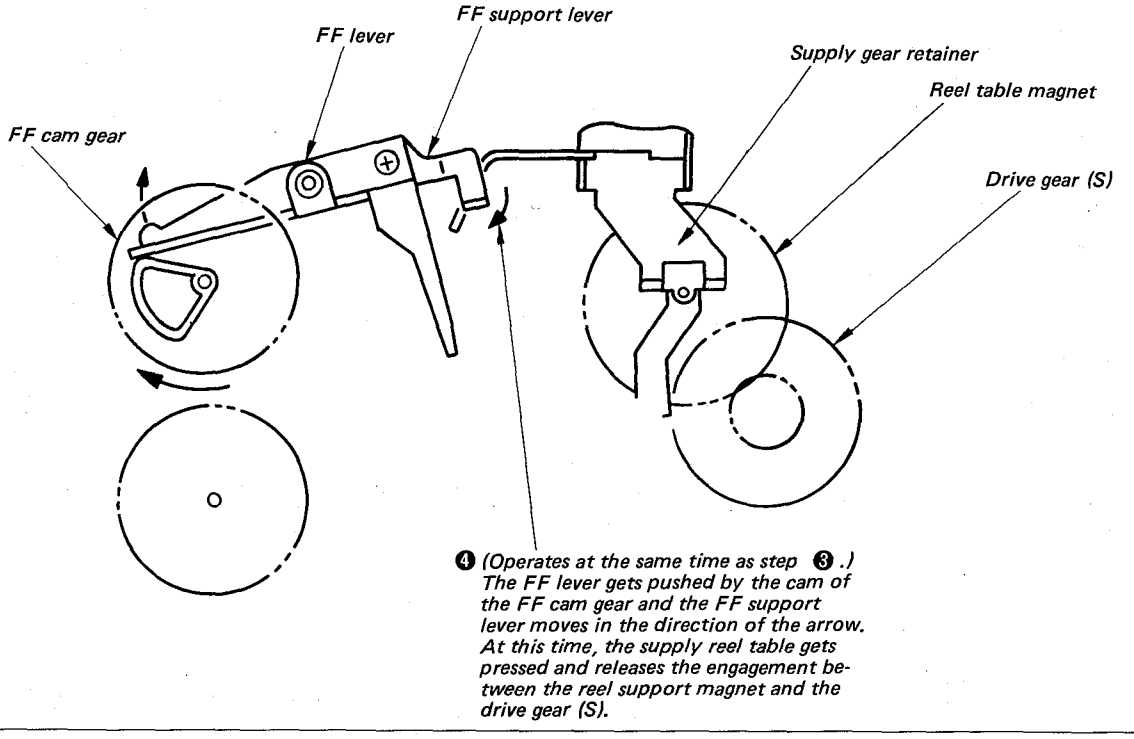

REV PAUSE OPERATION

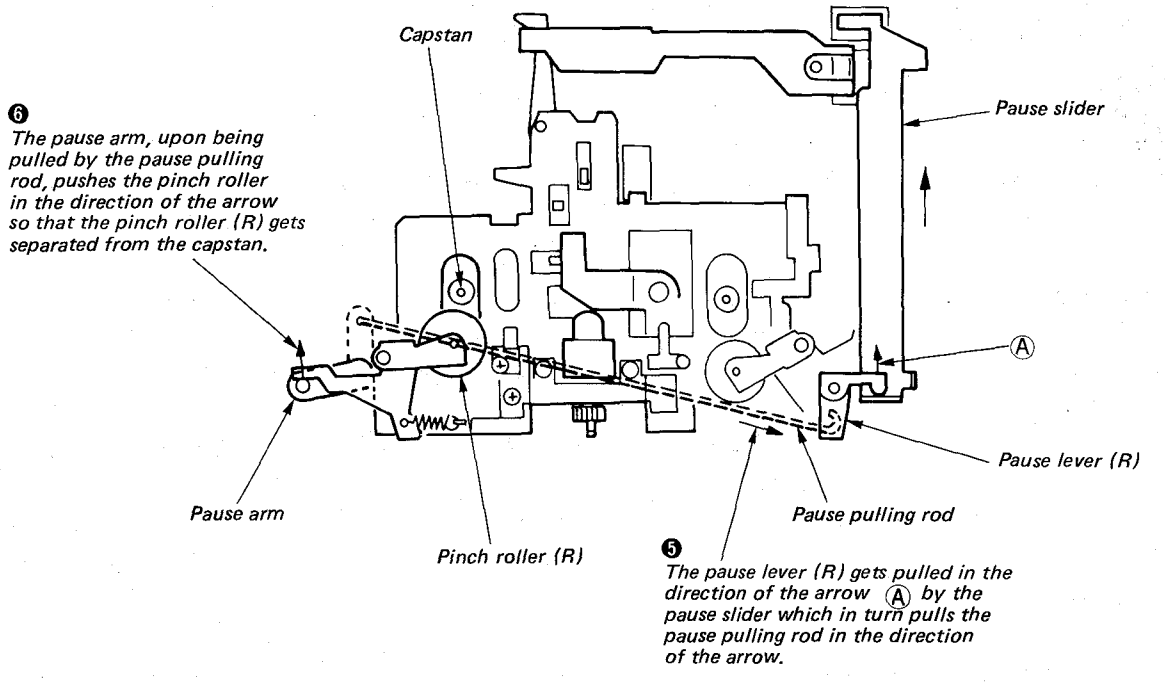

❻ *The pause arm, upon being pulled by the pause pulling rod, pushes the pinch roller in the direction of the arrow so that the pinch roller (R) gets separated from the capstan.*

❺ *The pause lever (R) gets pulled in the direction of the arrow Ⓐ by the pause slider which in turn pulls the pause pulling rod in the direction of the arrow.*

3-1. MECHANICAL ADJUSTMENT

8. FWD AMS MODE

- **TIMING OF IC501**

STOP → FF AMS
(AMS KEY INPUT OPERATION FROM STOP MODE)

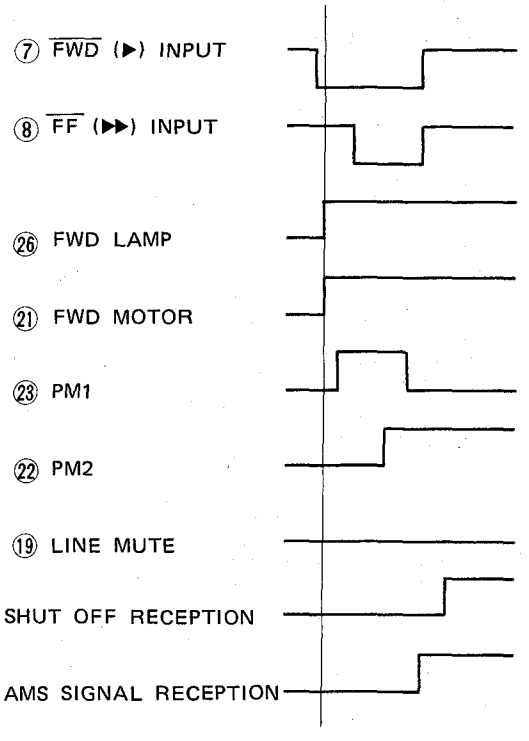

STOP → FAST-REVERSE AMS
(AMS KEY INPUT OPERATION FROM STOP MODE)

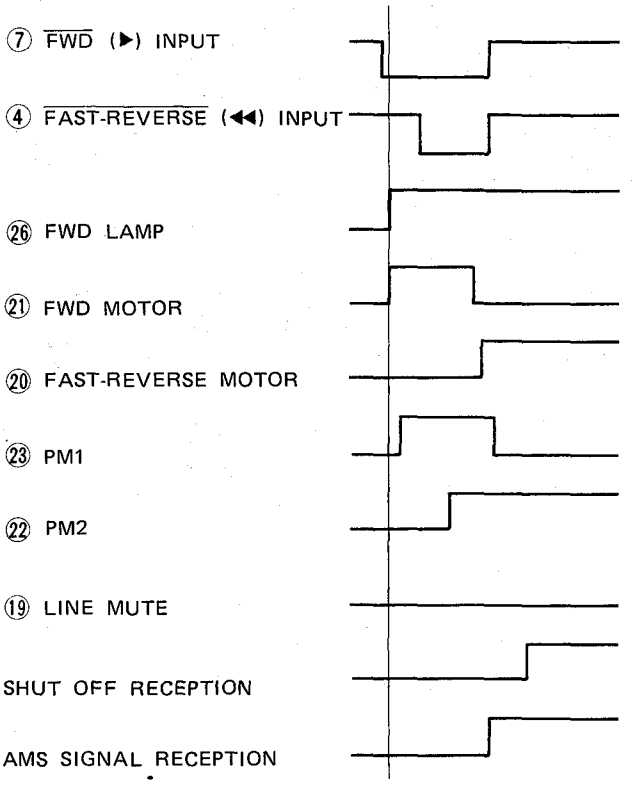

Operation of ❶ – ⓬ : See "Operation of FWD mode" on page 34 – 35.

FWD AMS OPERATION (5)

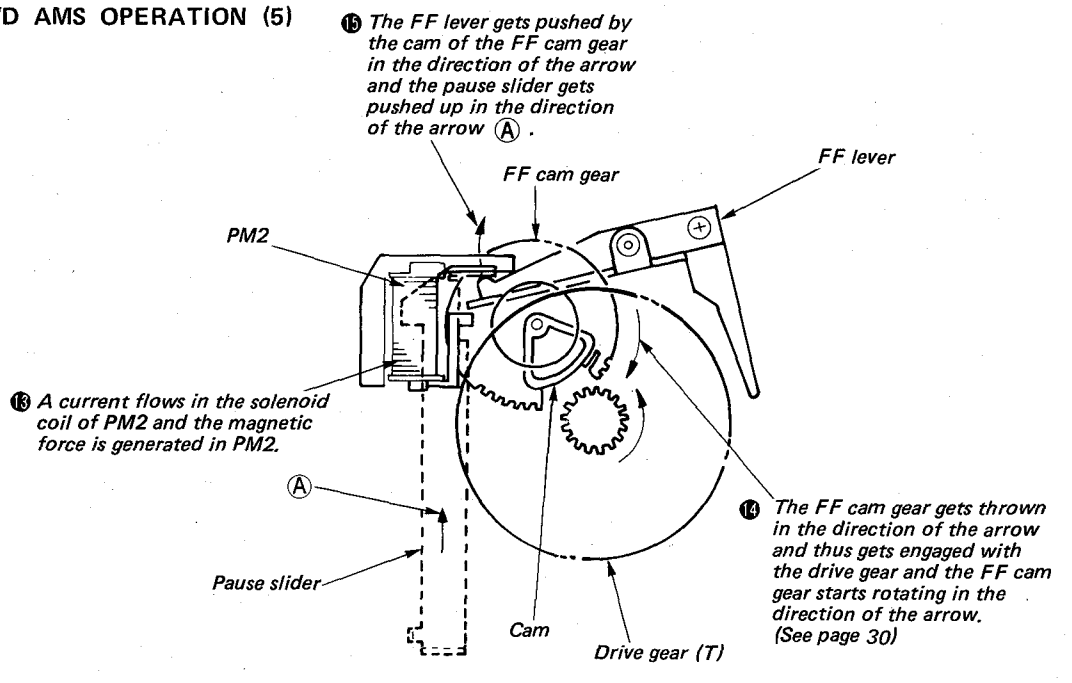

FWD AMS OPERATION (6)

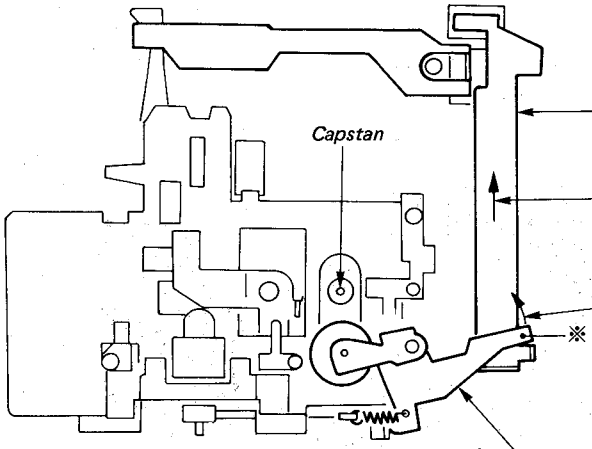

⓰ *Since pause slider is moved in the direction of Ⓐ, marked portion ※ of pinch roller (N) is pushed in the direction of arrow and pinch roller (N) is separated from capstan.*

FWD AMS OPERATION (7)

⓲ *Take-up reel retainer is pushed in the direction of an arrow Ⓑ by the asterisk portion (※) of FF lever and reel table magnet is disengaged with drive gear (T).*

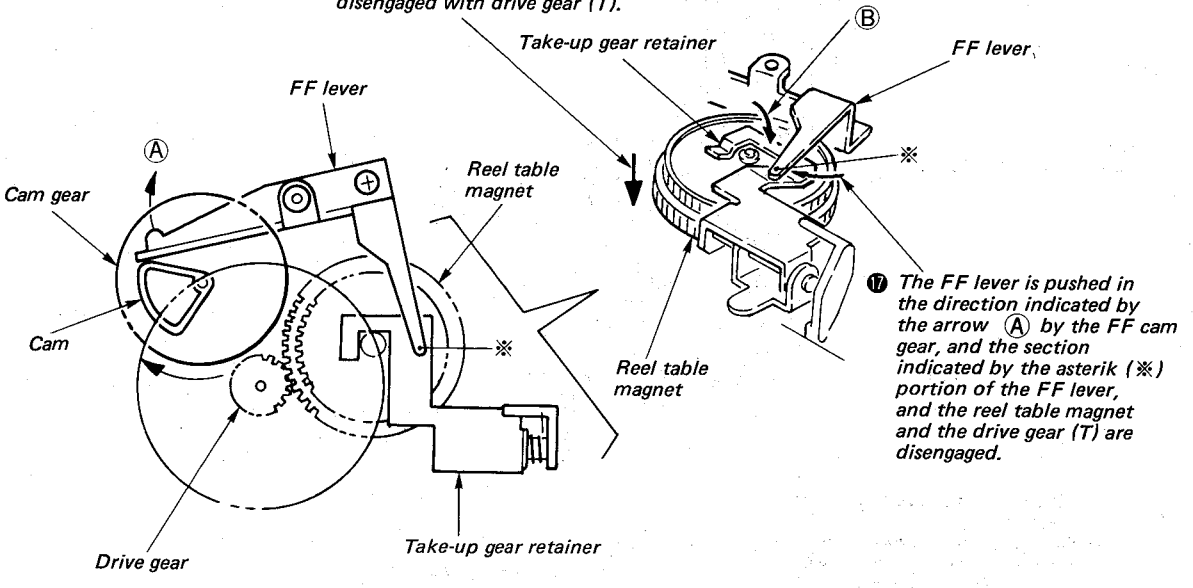

⓱ *The FF lever is pushed in the direction indicated by the arrow Ⓐ by the FF cam gear, and the section indicated by the asterik (※) portion of the FF lever, and the reel table magnet and the drive gear (T) are disengaged.*

REVERSE AMS (8)

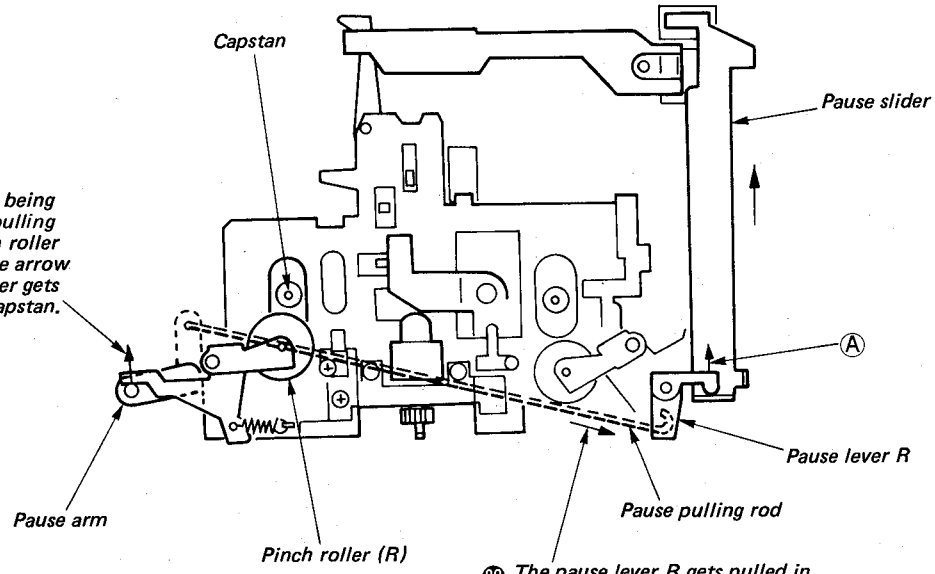

REVERSE AMS (9)

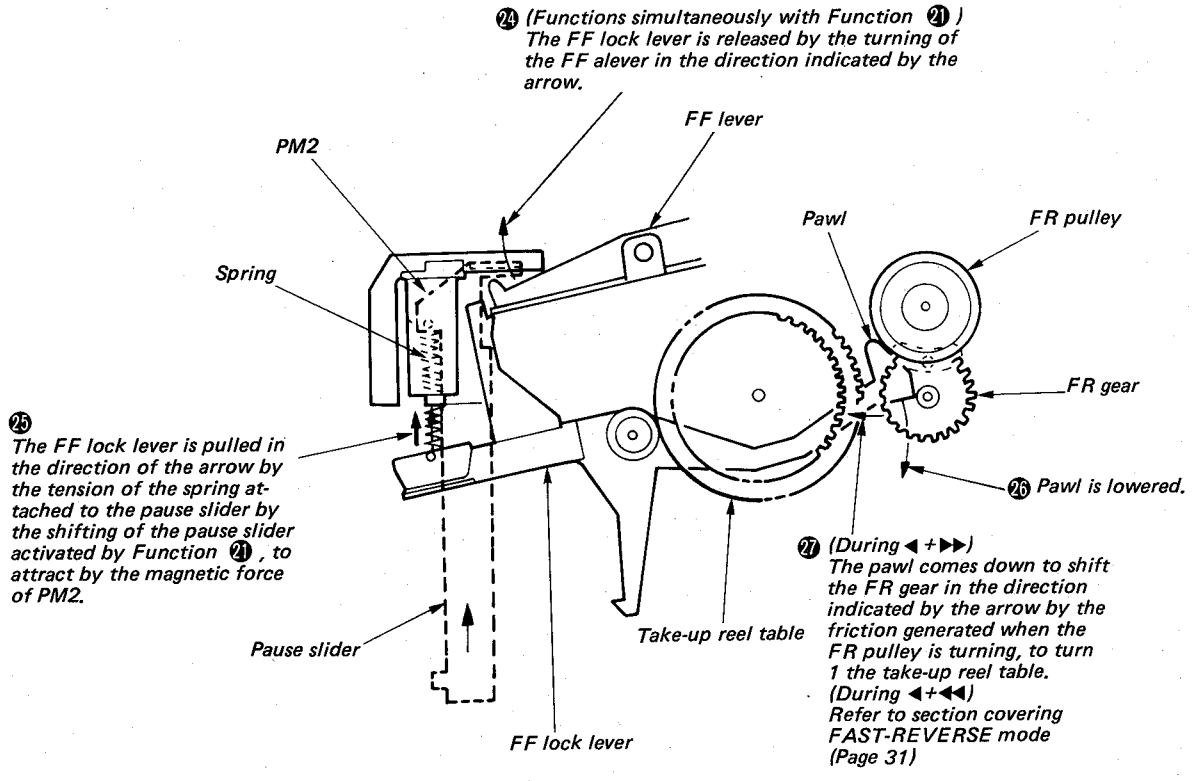

REVERSE AMS (10)

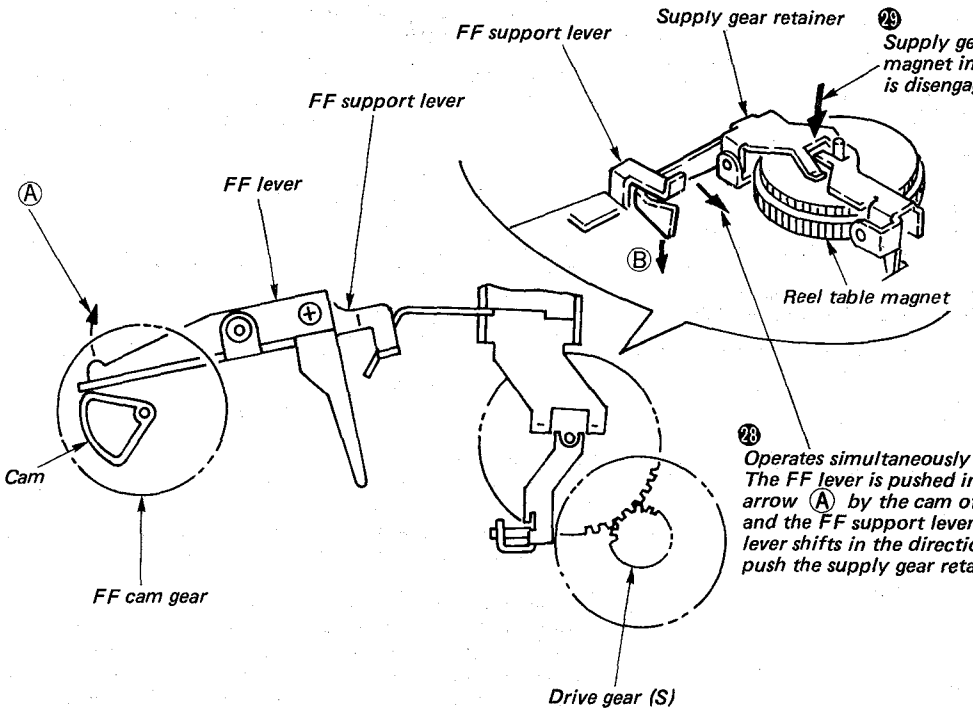

REVERSE AMS (11)

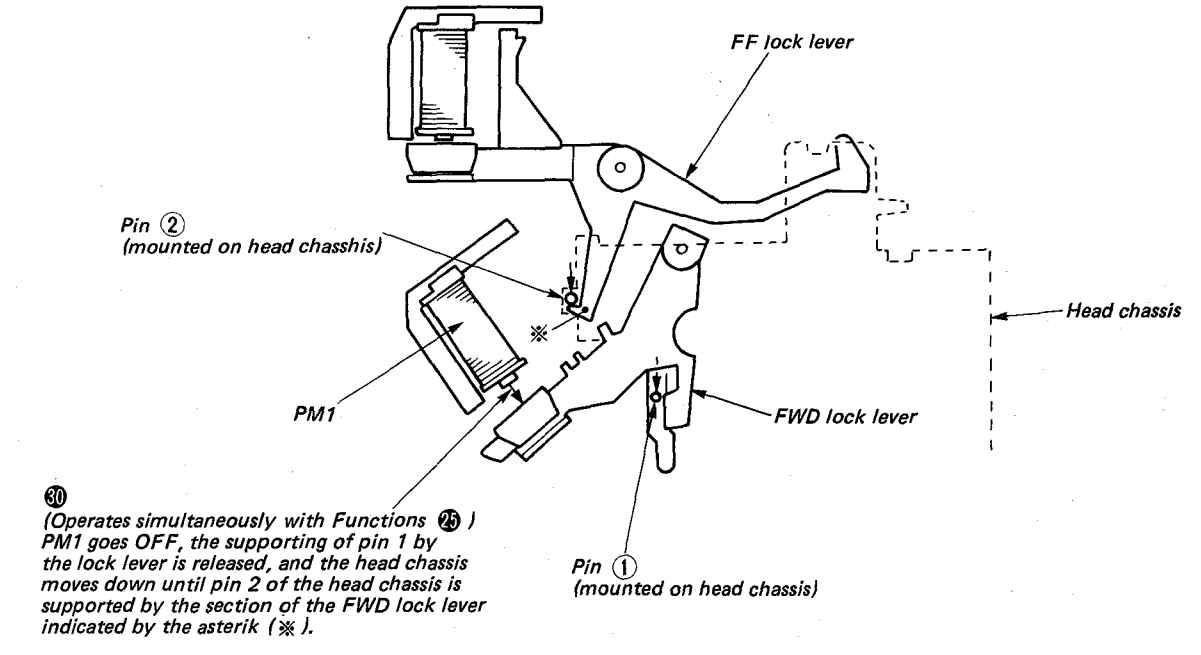

1-5. TROUBLE CHECKS

The following trouble checks will help you correct the most common problems encountered with a tape deck. Should any problem persist after you have made these checks, consult your nearest Sony service facility.
Before proceeding with these trouble checks, first check these basic points:
- The power cord must be firmly connected.
- Amplifier connections must be firmly made.
- Heads, capstan and pinch roller should be clean.
- The amplifier controls and switches should be set correctly.

FUNCTION BUTTONS AND TAPE TRANSPORT PROBLEMS

The function buttons do not activate right after the POWER switch is turned on.
- Logic-controlled function buttons operate approximately 4 seconds after the POWER switch is turned on.

Recording or playback begins as soon as the POWER switch is turned on.
- The TIMER switch is set at either REC or PLAY.

The ● button and the ► button do not activate.
- The cassette holder is not fully closed.

The ● button does not activate.
- No cassette in the holder.
- The tab has been removed from the cassette.

The automatic shut-off mechanism activates before the end of the tape.
- The tape is slack.
- This situation may also be caused by a deformed cassette shell.

Tape transport noise seems excessively loud in fast-forward or fast-reverse mode.
- This situation depends upon the cassette used and not a problem.

RECORDING AND PLAYBACK PROBLEMS

Recording or playback cannot be made or there is a decrease in sound level.
- Contamination or magnetic build-up on the record/playback head.
- Improper connection.
- Improper setting of the amplifier controls.

The AMS does not operate.
- The blank space between the selections is less than four seconds long.
- Severe noise or hum exists in the blank spaces.
- A recorded selection is less than 20 seconds long.

Excessive wow or flutter or drop out
- Contamination of the capstan or pinch roller.

Incomplete erasure
- Contamination of the erase head.

Increase of noise or erasure of high frequencies
- Magnetic build-up on the head.

Unbalanced tone in higher frequencies
- Improper setting of the DOLBY NR switches. When playing back, set the switches to the same position used in recording.
- Improper setting of the TAPE SELECT switch. Depress the TAPE SELECT switch when using a TYPE III (Fe-Cr) cassette or a TYPE IV (METAL) cassette which has no METAL tape detector slots.

HOWLING OR HUM NOISE

Oscillation occurs when trying to record from microphones.
- The microphone is too near the loudspeakers. Move the microphone away from the loudspeakers or reduce the amplifier volume.

Hum noise
- The tape deck is stacked on or under the amplifier. Relocate it.

1-6. BLOCK DIAGRAM (1)

– Record Playback section –

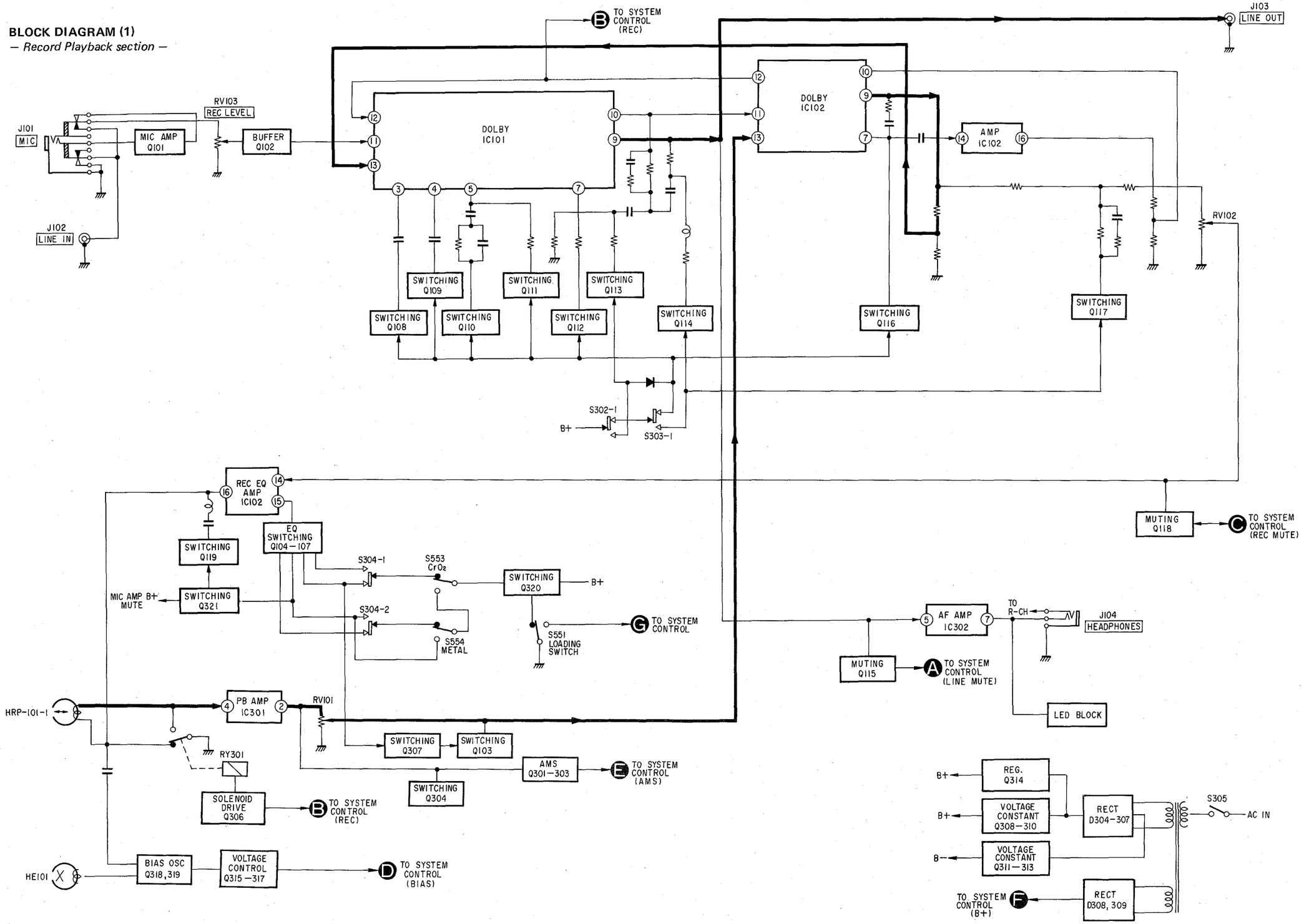

BLOCK DIAGRAM (2)
— System Control section —

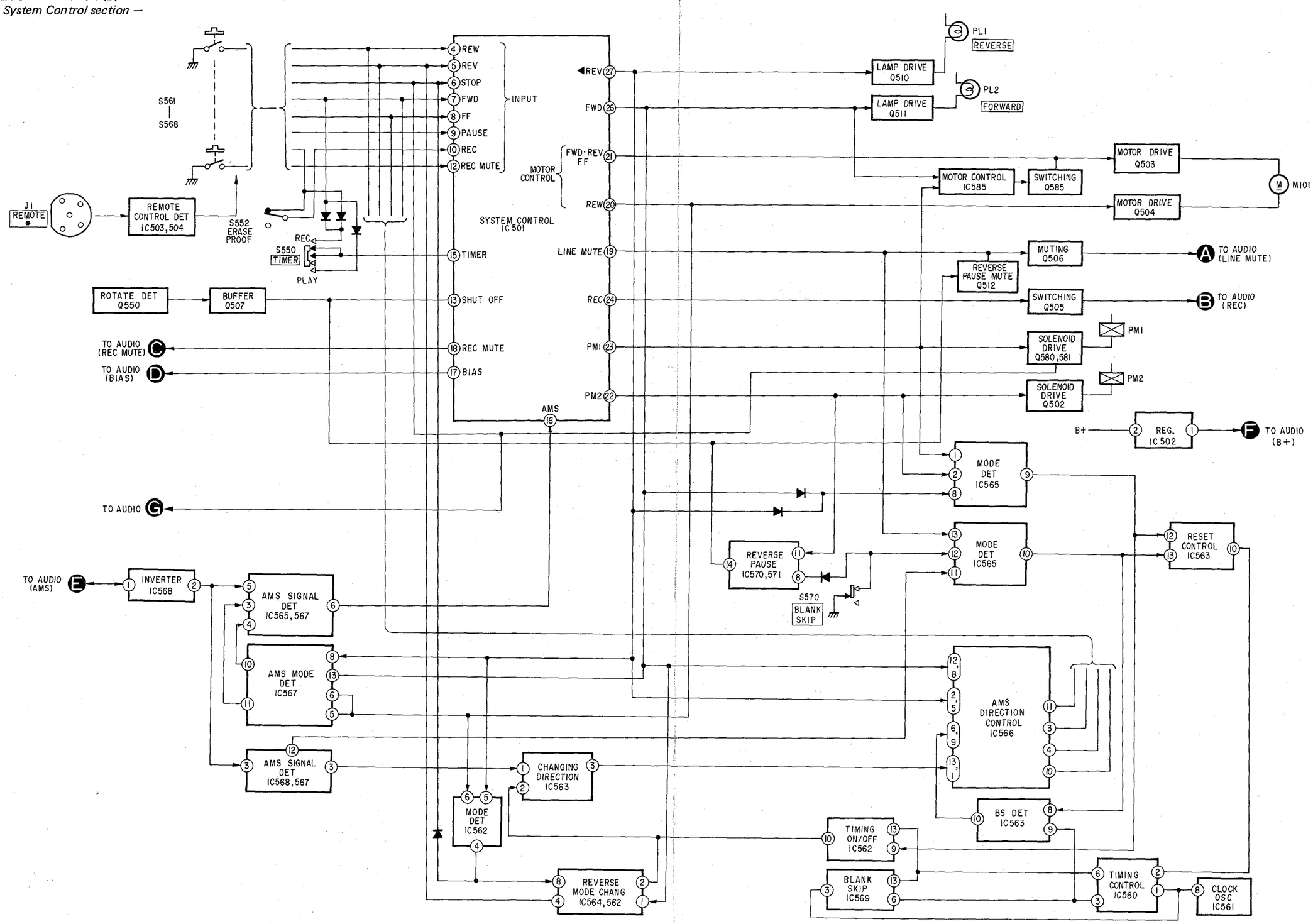

SECTION 2
DISASSEMBLY

Note: Follow the disassembly procedure in the numerical order given.

CASE REMOVAL

Remove four pieces case screw.

BOTTOM PLATE REMOVAL

Remove three pieces of screw +BVTT3x6

FRONT PANEL REMOVAL

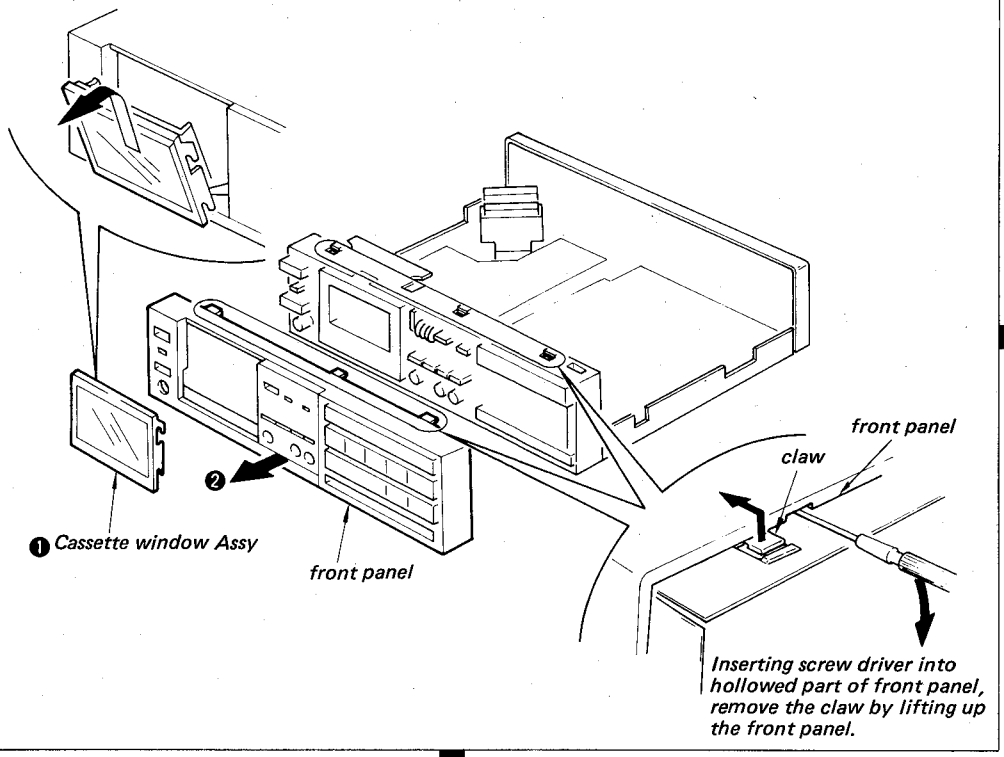

REC/PB BOARD REMOVAL

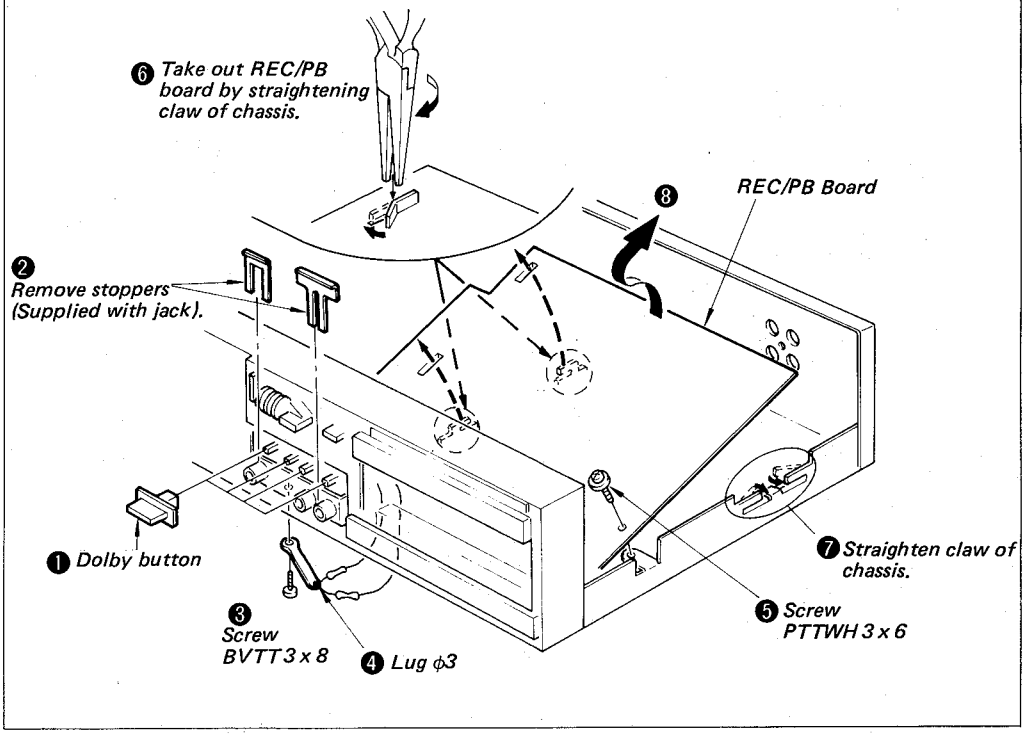

MECHANISM SECTION REMOVAL

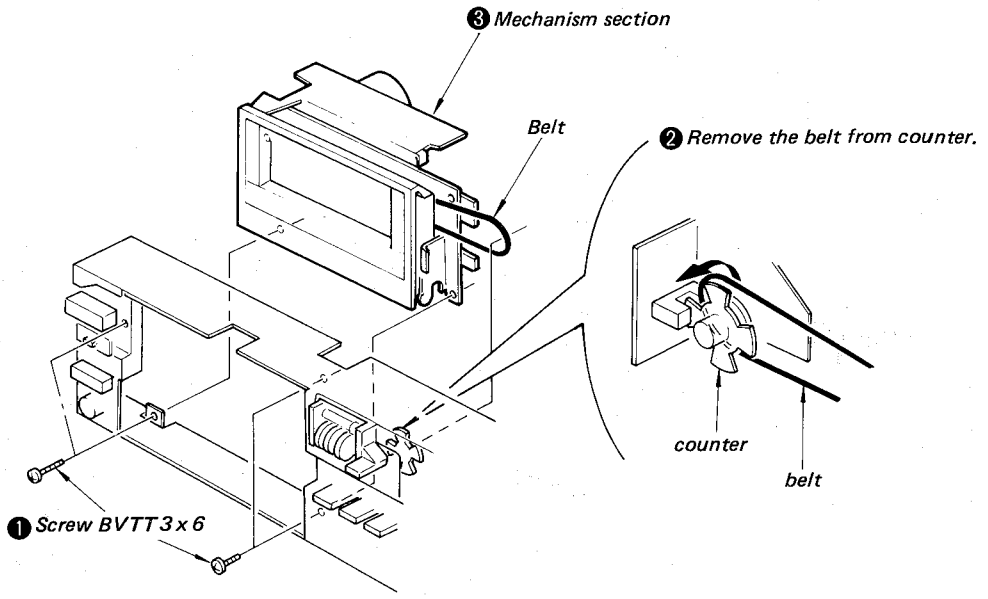

METER DRIVE BOARD REMOVAL

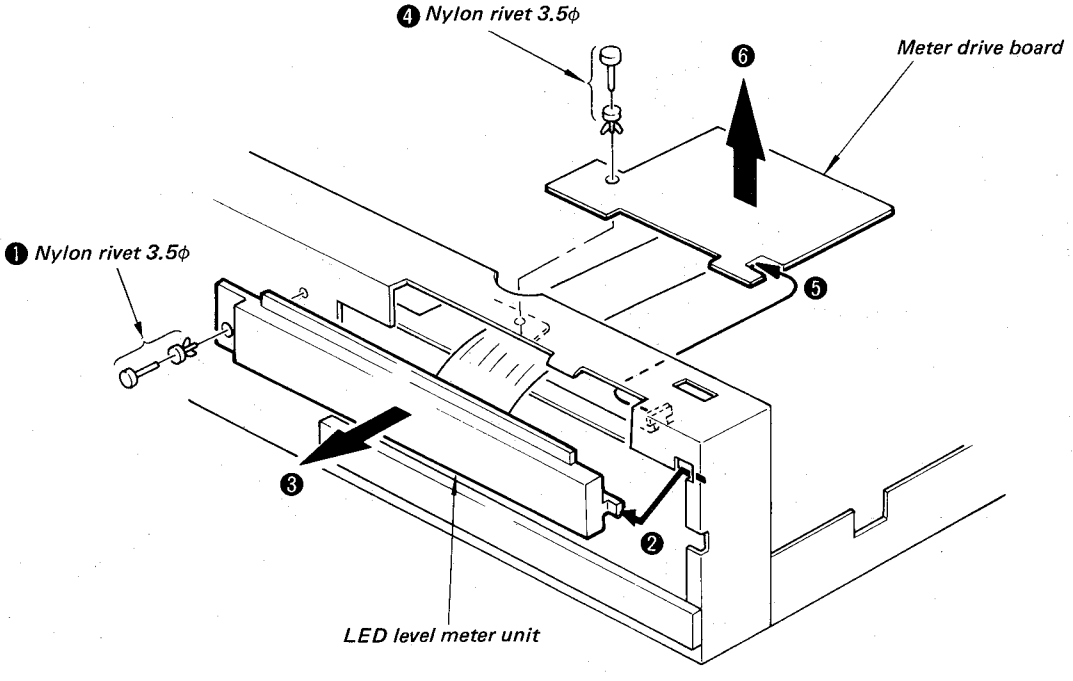

CASSETTE HOLDER REMOVAL

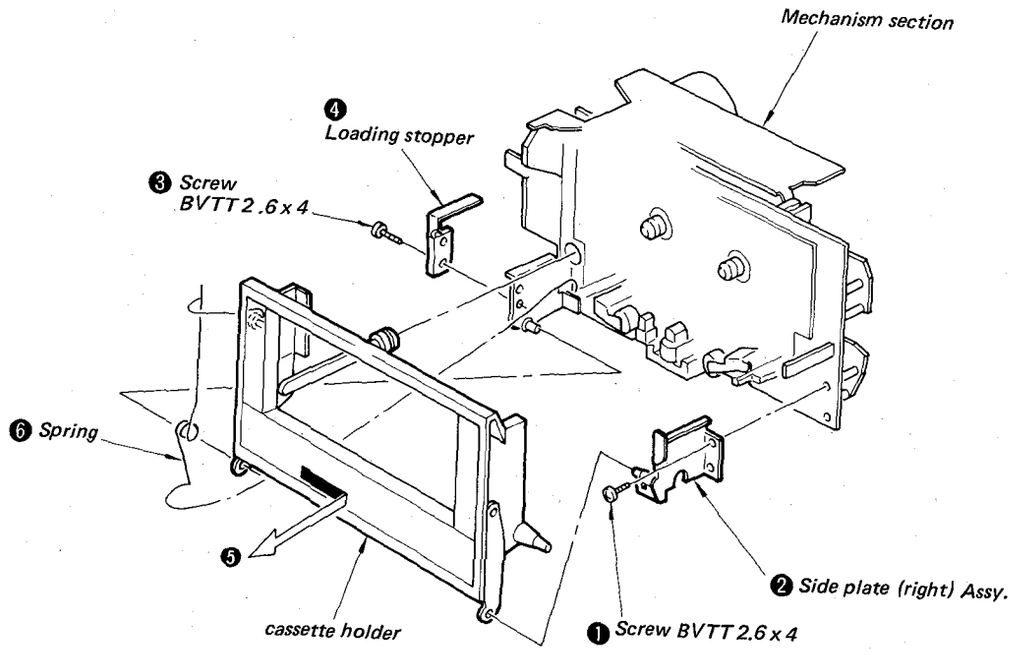

MECH CONTROL BOARD REMOVAL

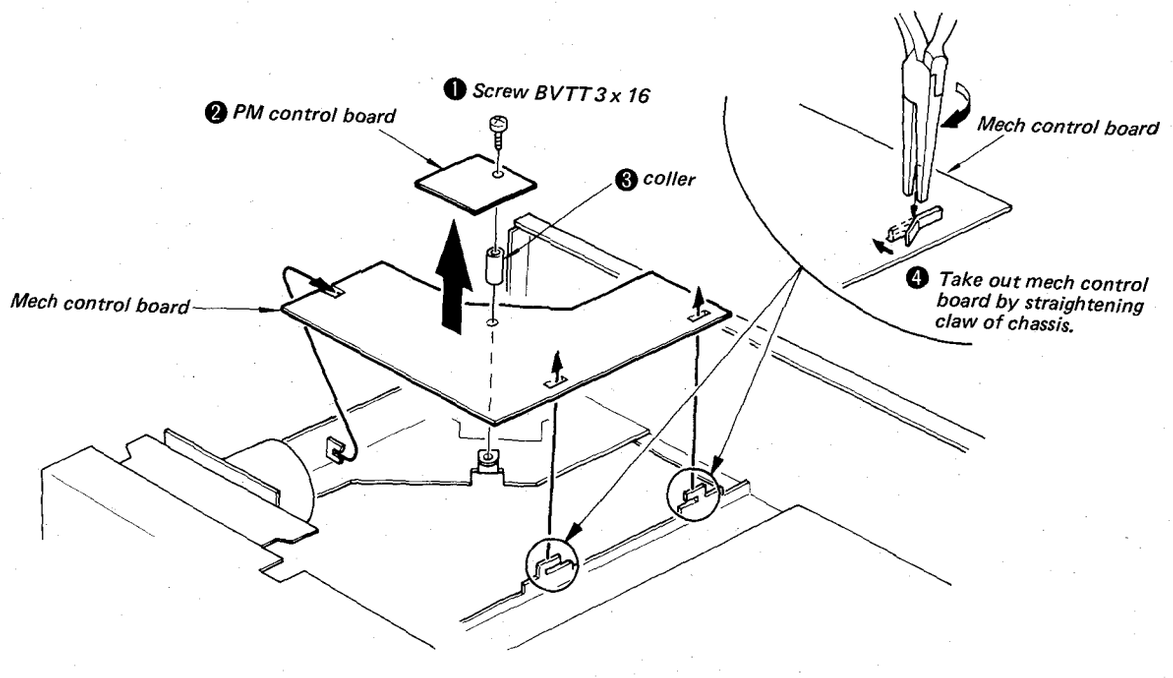

REC/PB HEAD REMOVAL

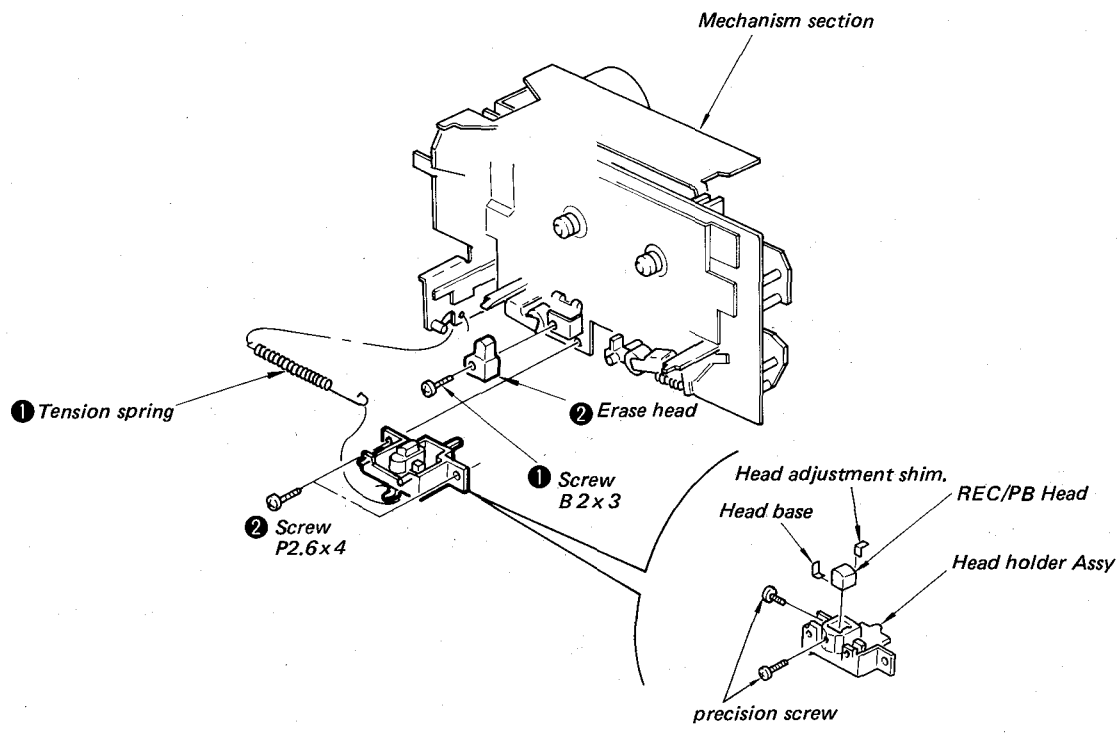

FLYWHEEL/BELT REMOVAL

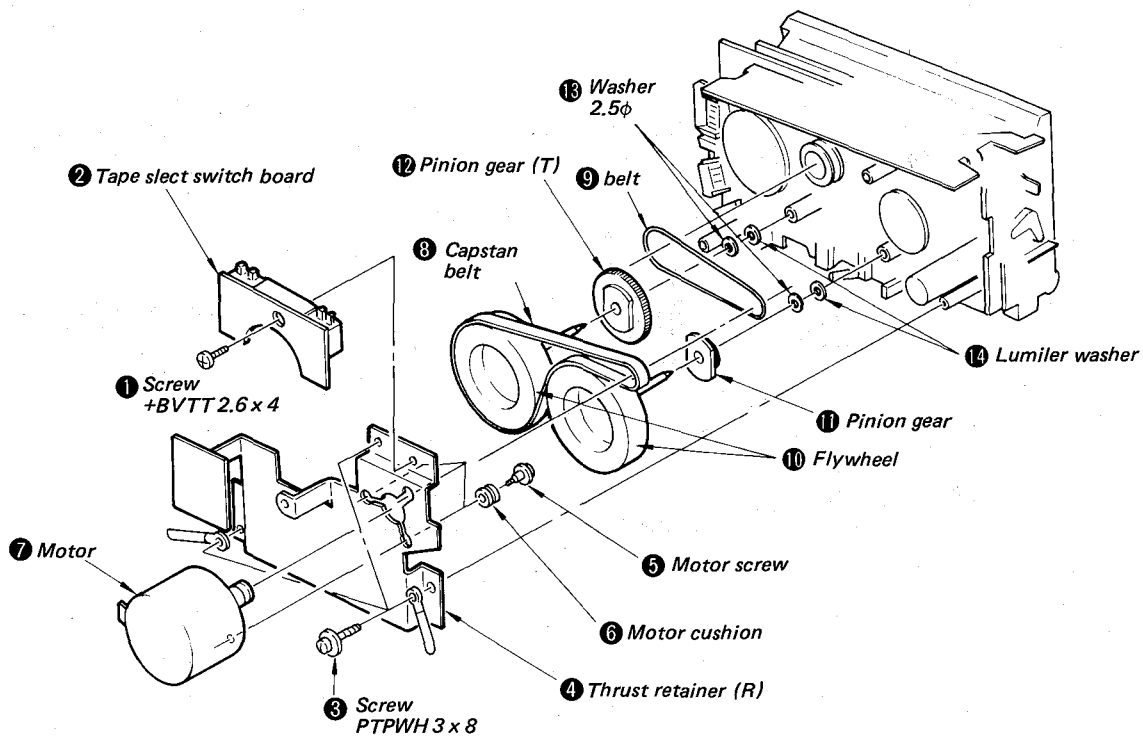

3-1. MECHANICAL ADJUSTMENTS

PRECAUTION

1. Clean the following parts with a denatured-alcohol-moistened swab:

record/playback head	pinch roller
erase head	rubber belts
capstan	idlers

2. Demagnetize the record/playback head with a head demagnetizer.
3. Do not use a magnetized screwdriver for the adjustments.
4. After the adjustments, apply suitable locking compound to the parts adjusted.
5. The adjustments should be performed with the rated power supply voltage unless otherwise noted.

Torque Measurement

Mode	Torque Meter	Torque
Forward	CQ-102C	30 – 50 g•cm (0.41 – 0.69 oz•inch)
FWD back tension	CQ-102C	2 – 5 g•cm (0.03 – 0.07 oz•inch)
Reverse	CQ-102B	30 – 50 g•cm (0.41 – 0.69 oz•inch)
REV back tension	CQ-102RB	2 – 5 g•cm (0.03 – 0.07 oz•inch)
FF•REW	CQ-201B	80 – 150 g•cm (1.1 – 2.1 oz•inch)

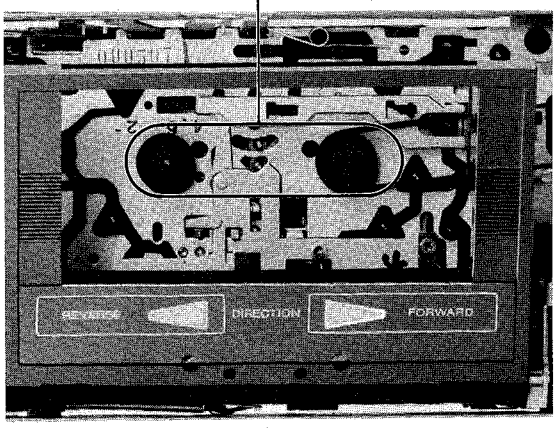

TAPE PATH ADJUSTMENT

When assembling the erase head and head holder, and when replacing the tape guide (L), be sure to perform the following adjustments.

1. Using a mirror tape cassette, adjust each of the adjustment screws until there is no tape curling.
2. Perform adjustments by changing the height adjustment shim of the head holder assembly and the height adjustment shim of the record/playback head, so that the core of the record/playback head is positioned correctly for both FWD and REV.

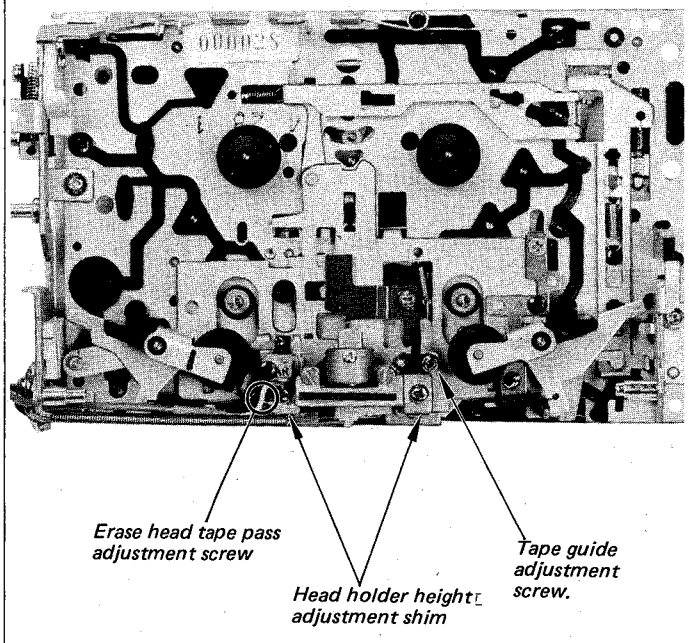

RECORD/PLAYBACK HEAD HEIGHT ADJUSTMENT

The following adjustments should be made when the record/playback head is replaced.

1. The head should be made after removing the head pad of the mirror tape cassette.
2. Using the leader section of the mirror cassette tape, adjustments are made by changing the adjusting shim so that the core and the edge of the tape become as shown in the illustration below when the tape is moved across the head.

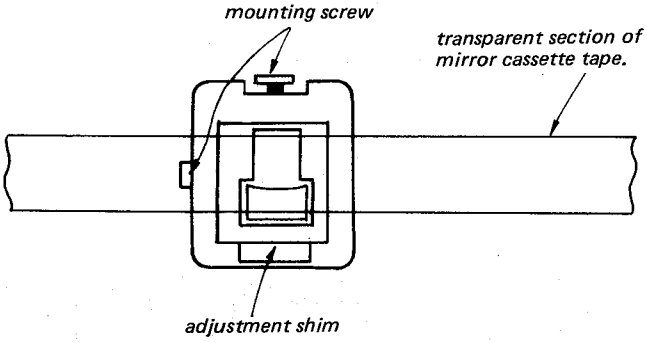

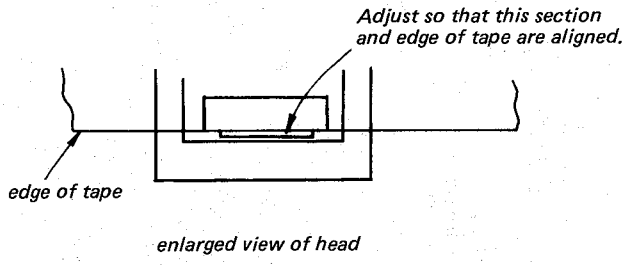

PAUSE ARM POSITION ADJUSTMENT

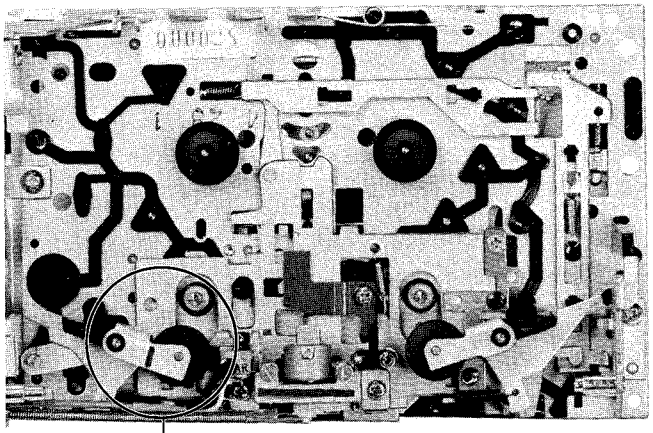

Loosen the hexagonal-head securing bolt B and adjust the position of the pause arm B so that the distance of A becomes 0.5 mm ~ 1.0 mm.

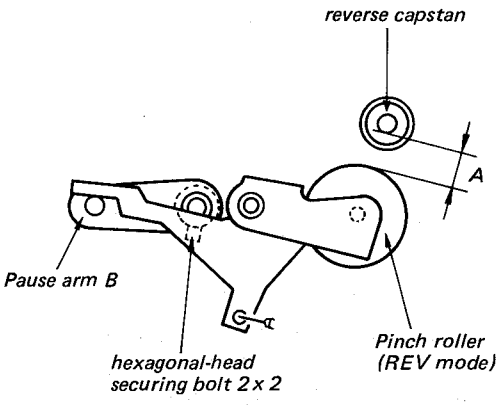

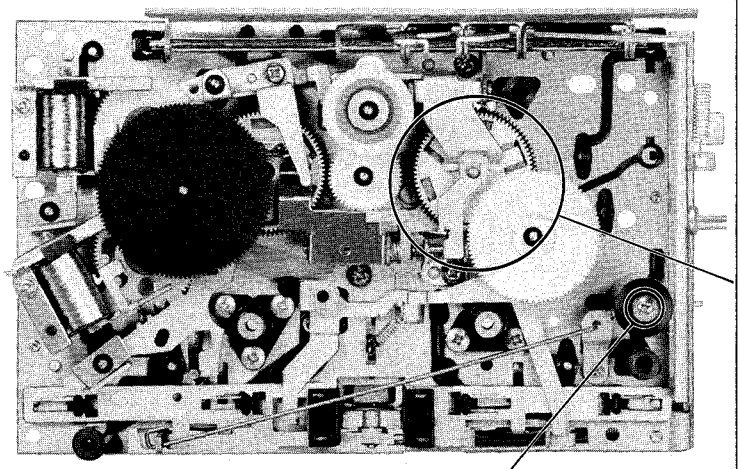

SUPPLY GEAR RETAINER POSITION ADJUSTMENT

MODE: REVERSE PAUSE

Adjust bending FF support lever to meet the specification.

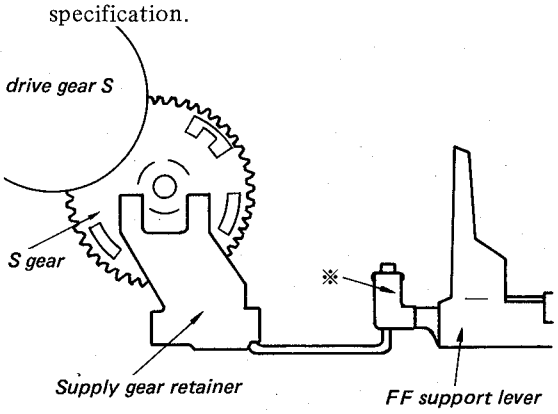

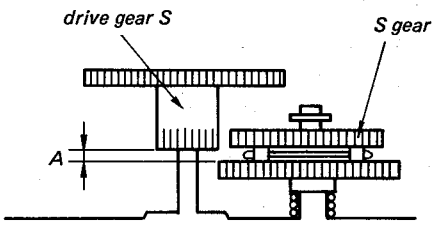

Specification: 0.5 ~ 1.5 mm

Soft Eject Adjustment

Specification

Eject time
0.4 ~ 2.5 sec.

Set the tape (C-90) and adjust the adjustment screw so that the EJECT TIME is obtained the specification.

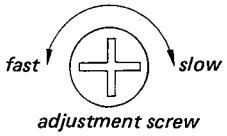

3-2. ELECTRICAL ADJUSTMENTS

Note: The adjustment should be performed in the order given in this service manual. The adjustments should be performed for both L-CH and R-CH.

- Set the TAPE switches according to the tape as follows.

Tape	Tape Switch
CS-10	TYPE I
CS-20	TYPE II
CS-30	TYPE III
CS-40	TYPE IV

- Switches and controls should be set as follows unless otherwise specified.

DOLBY NR switch:	OFF
TAPE switch:	TYPE I
TIMER switch:	OFF

- Standard Record:

  Deliver the standard input signal level to the input jack and set the REC LEVEL control to obtain the standard output signal level.

Standard Input Level

	MIC	LINE IN
source impedance	300Ω	10 kΩ
input level	0.77 mV (-60 dB)	0.25 V (-10 dB)

Standard Output Level

	PHONES	LINE OUT
load impedance	8Ω	47 kΩ
output level	31 mV (-28 dB)	0.44 V (-5 dB)

Tape Speed Adjustment

Setting:

Tape Selector Switch . . . . . AUTO
Dorby NR switch . . . . . OFF

Procedure:

Mode: FWD PLAYBACK

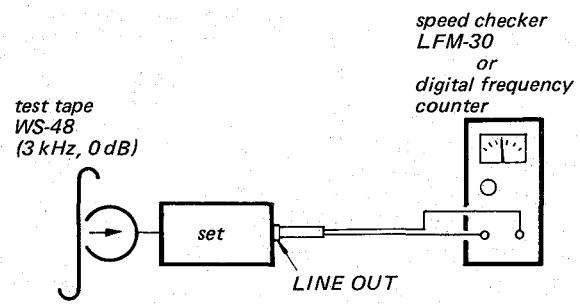

Specification:

Speed checker	Digital frequency counter
±0.5%	2,985 ~ 3,015 Hz

Frequency difference between the beginning and the end of the tape should be within 1% (30 Hz).

Record/playback Head Azimuth Adjustment

Procedure:

1. Mode: playback (NOR/REV)

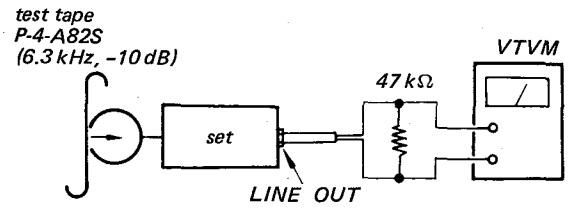

2. Turn the adjustment screw for the maximum output levels. If these levels do not match, turn the adjustment screw until both of output levels match together within 0.5 dB.

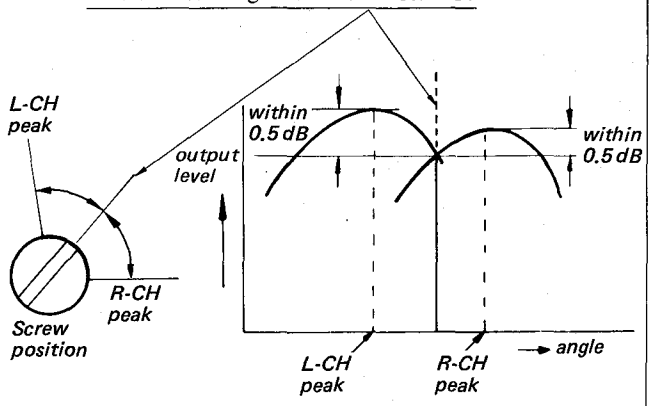

3. Phase Check
   Mode: playback

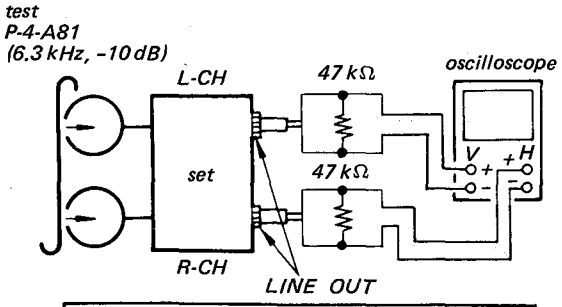

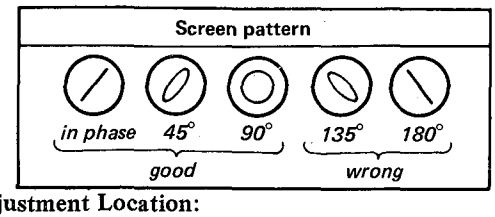

Adjustment Location:

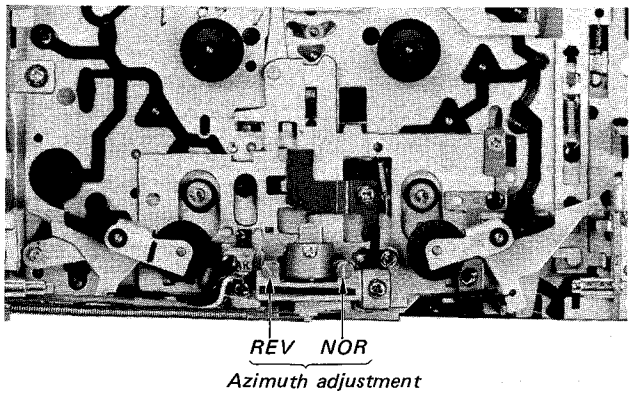

Playback Level Adjustment

Procedure:

Mode: playback

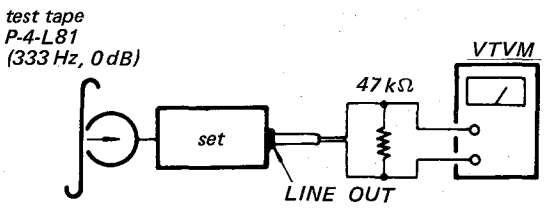

Specification:

LINE OUT level: 0.52 ~ 0.59 V
(-3.5 ~ -2.5 dB)
Level difference between channels:
less than 0.5 dB

Check that the LINE OUT level does not change in playback mode while changing the mode from playback to stop several times.

Adjustment Location:

– RECORD/PLAYBACK BOARD –

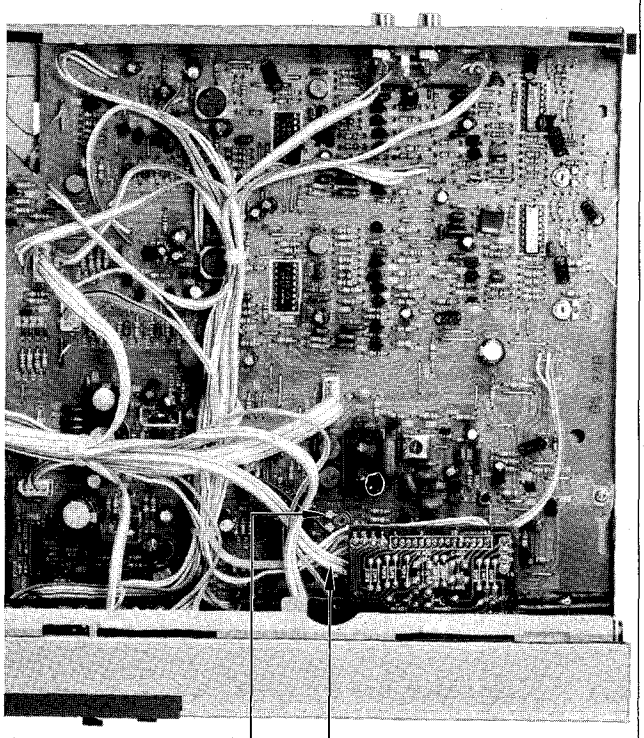

Record Bias Adjustment

Setting:

REC LEVEL control: standard record
(See page 62)

Procedure:

1. Mode: record

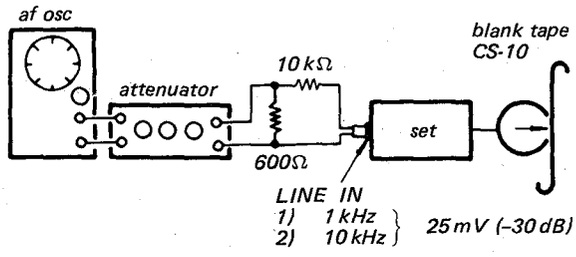

2. Mode: playback

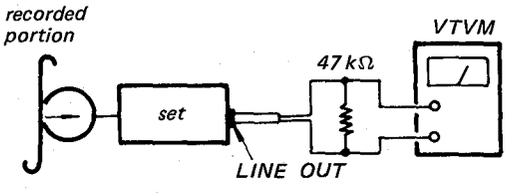

Adjust CT101 (L-ch), CT201 (R-ch) so that the LINE OUT level of 10 kHz signal is 0 dB relative to that of 1 kHz. signal.

Adjustment Location:

– Record/Playback Board –

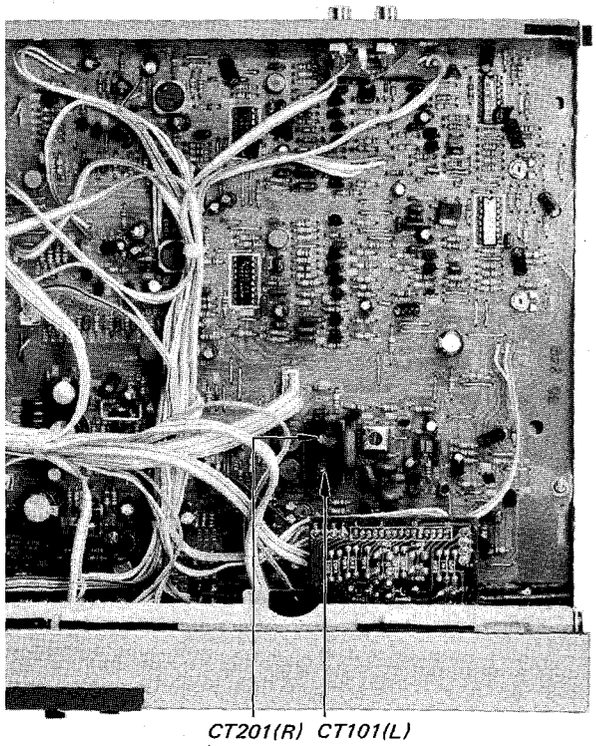

Record Level Adjustment

Setting:

REC LEVEL control: standard record
(See page 62)

Procedure:

1. Mode: record

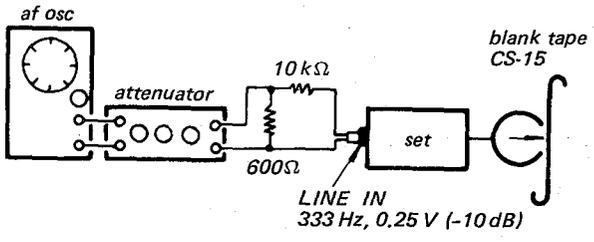

2. Mode: playback

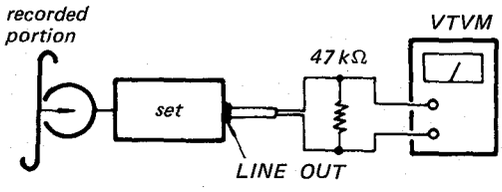

Specification:

LINE OUT level: 0.41 to 0.46 V
(-5.5 to -4.5 dB)

Adjustment Location:

– Record/Playback –

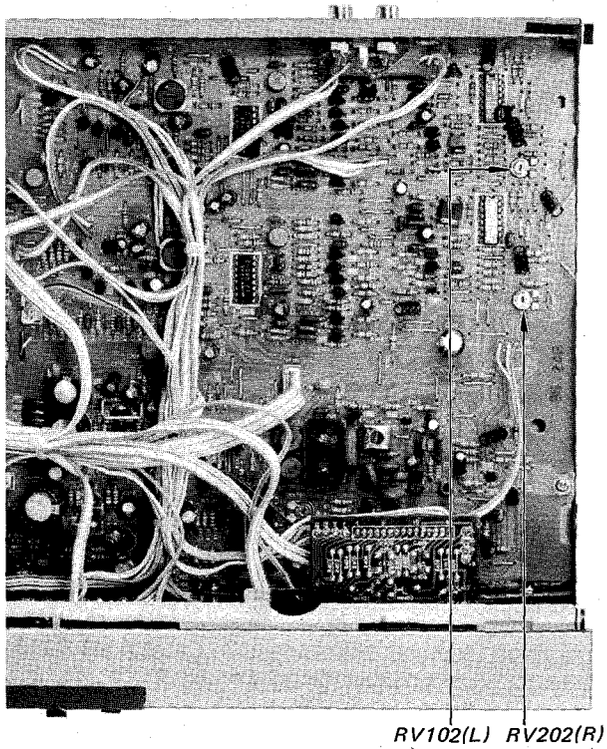

Level Meter Calibration

Procedure:

1. Mode: record

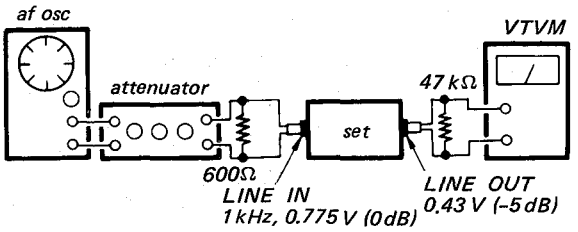

2. Set the REC LEVEL control so that the LINE OUT level is 0.44 V (-5 dB).
3. Adjust RV401 and RV402 so that the light in the 4th segment from the left of the LED meter goes on.
4. Set the REC LEVEL control so that the LINE OUT level is 1.9 V (8 dB). Make sure that lights in the segments go on.

Note: Slide the REC LEVEL control rightward slowly.

Adjustment Location:

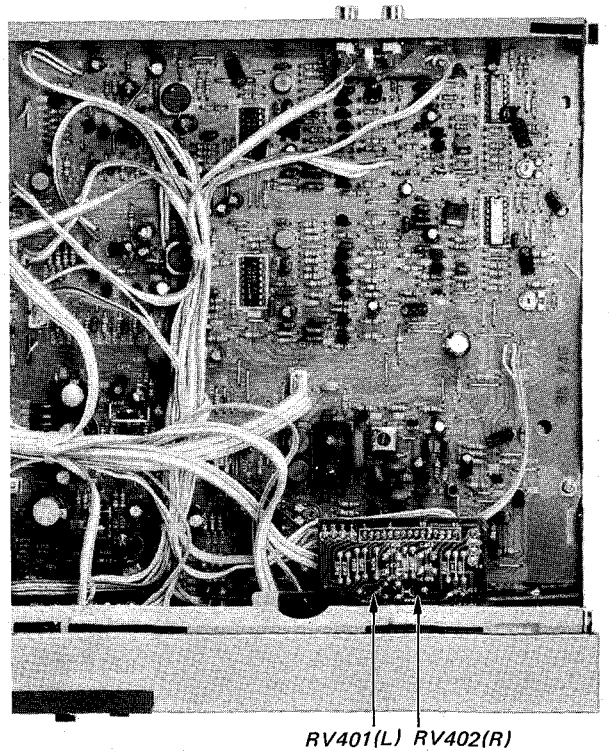

RV401(L) RV402(R)
Level meter adjustment

• Semiconductor Lead Layouts

CX174
CX174A
NJM2903D
TC4001BP
TC4011BP
TC4013BP
TC4023BP
TC4024BP
TC4081BP
TC4069UBP
UPC339C

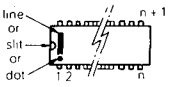

(Top view)

UPC78M05H

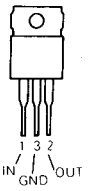

M5218L

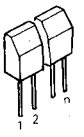

SPI201

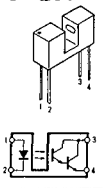

10E2
1S1555
1SS133
HZ6B1L
HZ11B1L

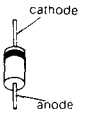

2SC945
2SC1345
2SC1363
2SC1364
2SC2001
2SA733A-K
JC501

2SA1027R

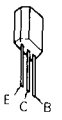

2SB548
2SD414

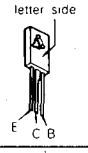

2SC2785

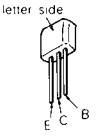

2SA1175

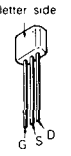

SLR34DC5
SLR-34URC5

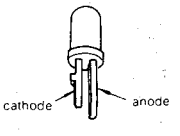

4-1. MOUNTING DIAGRAM

— Record Playback section —

• See page 65 for semiconductor lead layouts.

D	IC, Q
	114
301	
	IC102 112 102
	119 321
	113
	111
	116 IC101
	106 107
	104 105
117	110
118	109
	108 115
	IC202
	214 215
	216 212 219
	217 213
	211 202 204
	IC201
	218 210 207
	206 205
	320
313 314	
315 316	209
	208
311 310	
317 319	
320	314
308	
309	316 317 308
305	309
304	
306	315 310
307	306
303 312	301
	318
	307 319 313
302	
	304 103 312
	311
	IC301 IC302
	302 303
	203
	101
	201
318	

Note:

- Color code of sleeving over the end of the jacket.

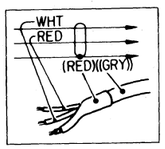

- ○— : parts extracted from the component side.
- ●— : parts extracted from the conductor side.
- ■ : part mounted on the conductor side.
- [ ]+ : indicates side identified with part number.
- : B + pattern
- : B – pattern
- : signal path
- : L-CH signal path
- : R-CH signal path

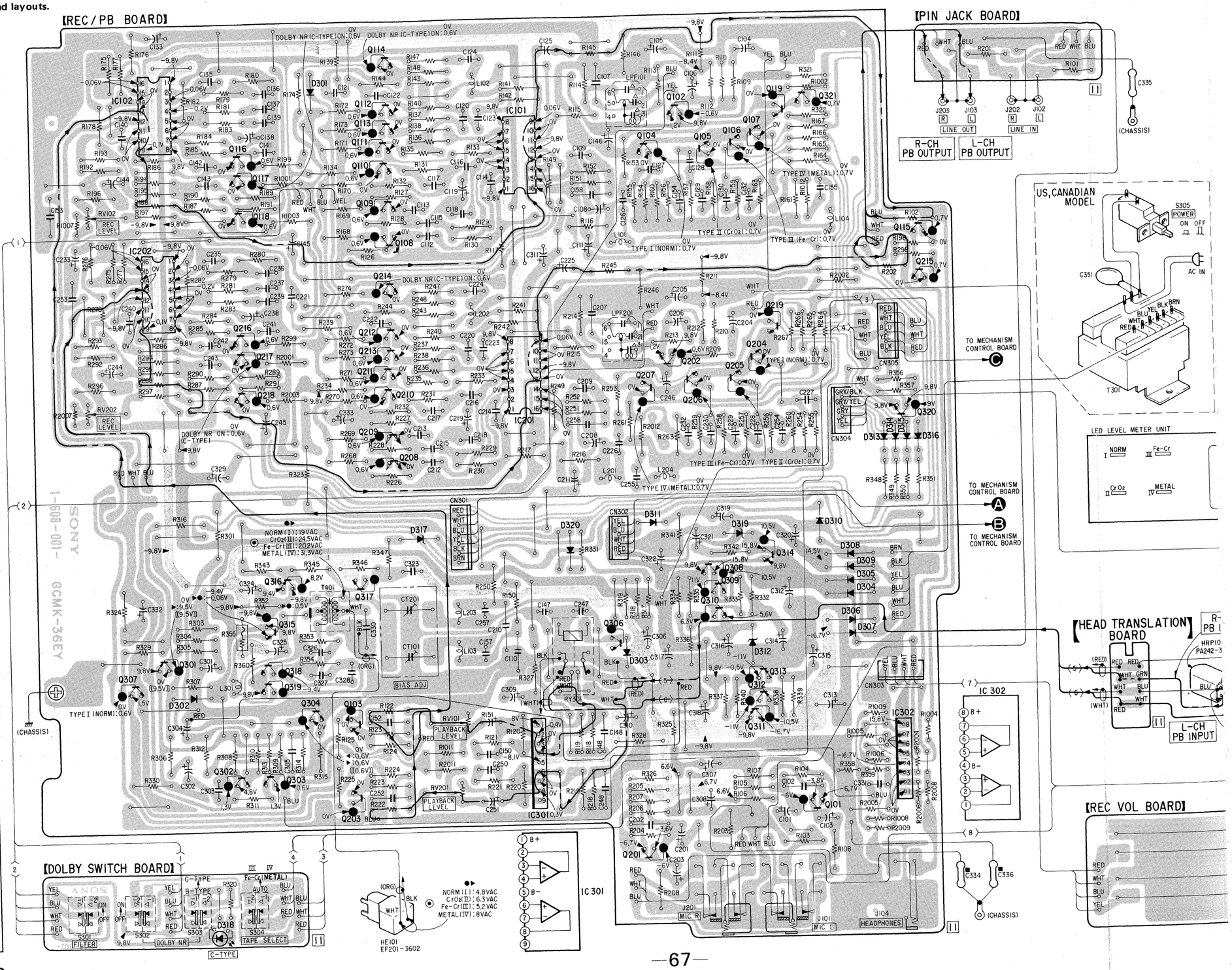

D E F G H I J K L

1 2 3 4 5

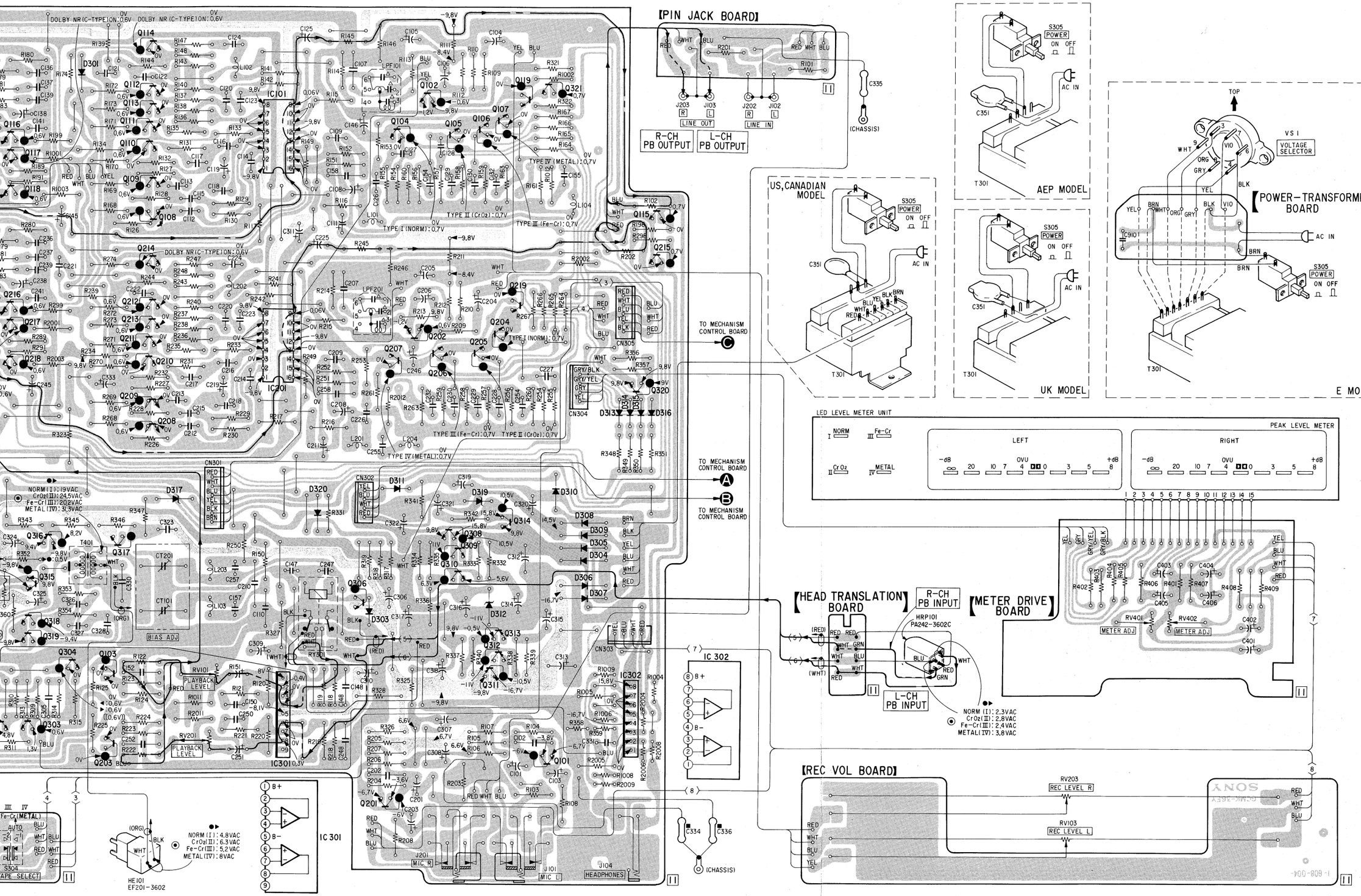

A B C D E F G H

4-2. SCHEMATIC DIAGRAM

— Record Playback section —

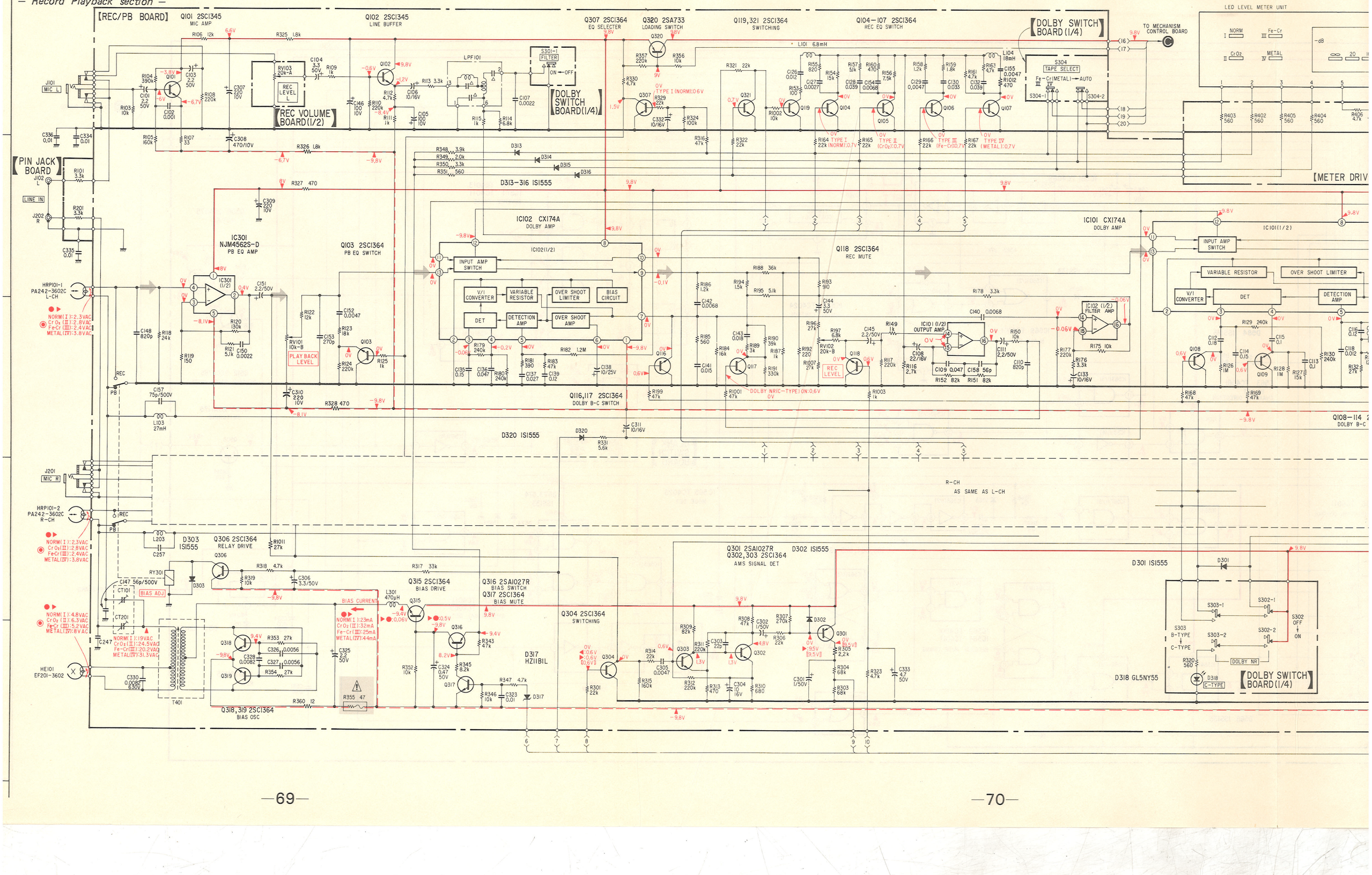

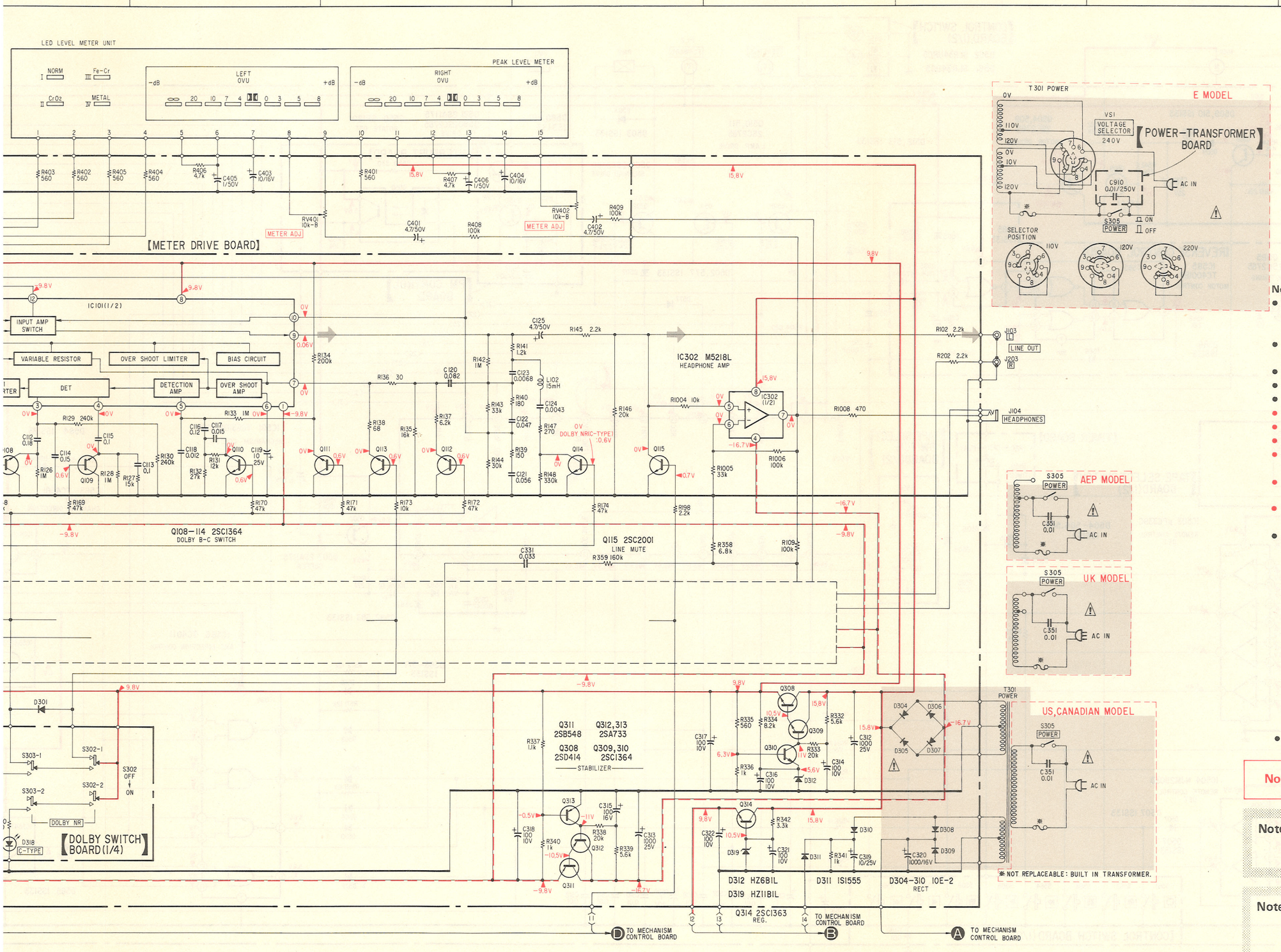

Note:

- All capacitors are in μF unless otherwise noted. pF: μμF 50WV or less are not indicated except for electrolytics and tantalums.
- All resistors are in ohms, 1/4 W unless otherwise noted. kΩ : 1000 Ω, MΩ : 1000 kΩ
- : nonflammable resistor.
- △ : internal component.
- : panel designation.
- : adjustment for repair.
- ——— : B+ bus.
- – – – : B– bus.
- Voltages are dc with respect to ground unless otherwise noted.
- Readings are taken under no-signal conditions with a VOM (50 kΩ/V).
- Voltage variations may be noted due to normal production tolerances.
- Switches

Ref. No.	Switch	Position
S301	FILTER	OFF
S302	DOLBY NR	OFF
S303	DOLBY B, C-TYPE	B-TYPE
S304	TAPE SELECT	AUTO
S305	POWER	OFF
S550	TIMER	OFF
S551	LOADING	OFF
S552	ERASE PROOF	OFF
S553	TAPE DETECTING (CrO_2)	OFF
S554	TAPE DETECTING METAL	OFF

- ➡ : signal path.

Note: Voltages are measured with a VOM (50kΩ/V).

Note: The components identified by shading and mark ⚠ are critical for safety. Replace only with part number specified.

Note: Les composants identifiés par une trame et une marque ⚠ sont critiques pour la sécurité. Ne les remplacer que par une pièce portant le numéro spécifié.

4-3. SCHEMATIC DIAGRAM

— System Control section —

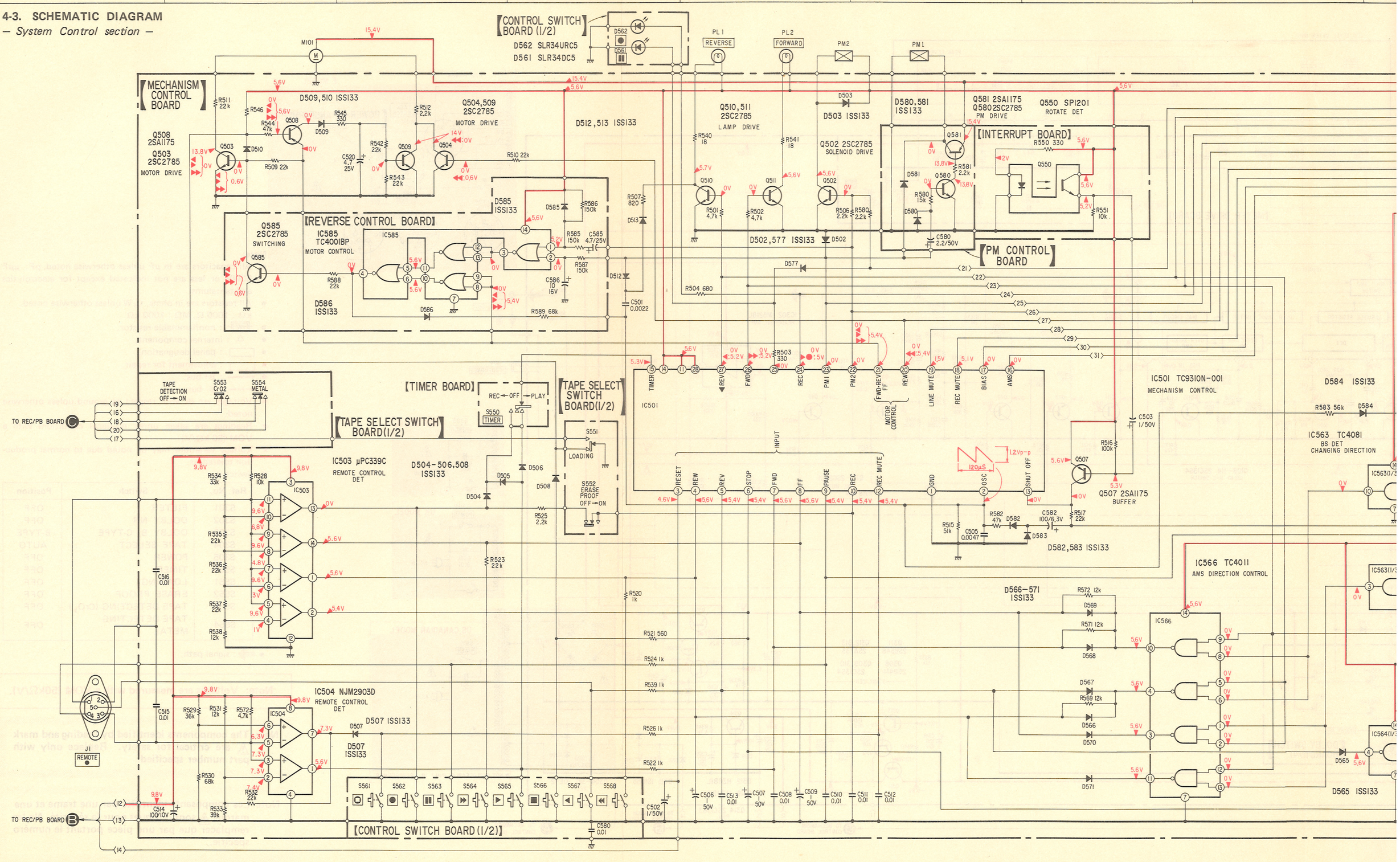

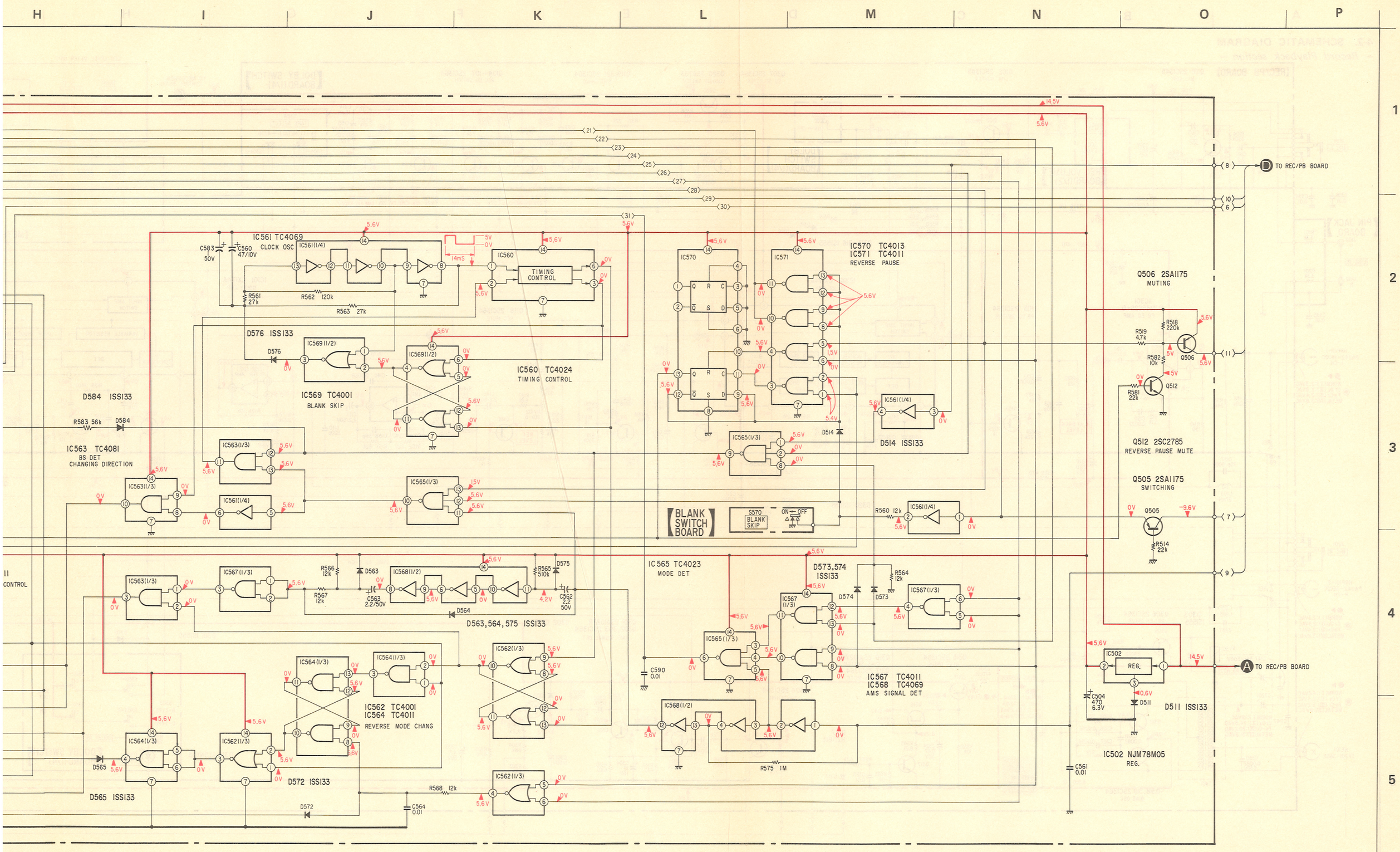
H
I
J
K
L
M
N
O
P
1
2
3
4
5
TO REC/PB BOARD
IC561 TC4069
CLOCK OSC
IC560 TC4024
TIMING CONTROL
IC569 TC4001
BLANK SKIP
D576 ISS133
D584 ISS133
IC563 TC4081
BS DET
CHANGING DIRECTION
IC570 TC4013
IC571 TC4011
REVERSE PAUSE
D514 ISS133
Q506 2SA1175
MUTING
Q512 2SC2785
REVERSE PAUSE MUTE
Q505 2SA1175
SWITCHING
BLANK SWITCH BOARD
S570
BLANK SKIP
IC565 TC4023
MODE DET
D573,574 ISS133
D563,564,575 ISS133
IC562 TC4001
IC564 TC4011
REVERSE MODE CHANG
IC567 TC4011
IC568 TC4069
AMS SIGNAL DET
D565 ISS133
D572 ISS133
IC502 NJM78M05
REG.
D511 ISS133
TO REC/PB BOARD

4-4. MOUNTING DIAGRAM

• See page 65 for semiconductor lead layouts.

– System Control section –

IC		580 581	IC567 IC568 IC570	IC566 IC565	IC562 IC563	IC564 IC560 IC561	IC569 IC502	550 IC501 IC503 IC504
Q	585 IC585		512	IC571	510 511	502 508 509 504 503	505 506	507
D	586 585	580 581	567 566 570 569 568 571 572 573 574 563 564 575	514 577 503	565 509	576 502 511 510	584 512 513 583	582 507 508 504 505 506

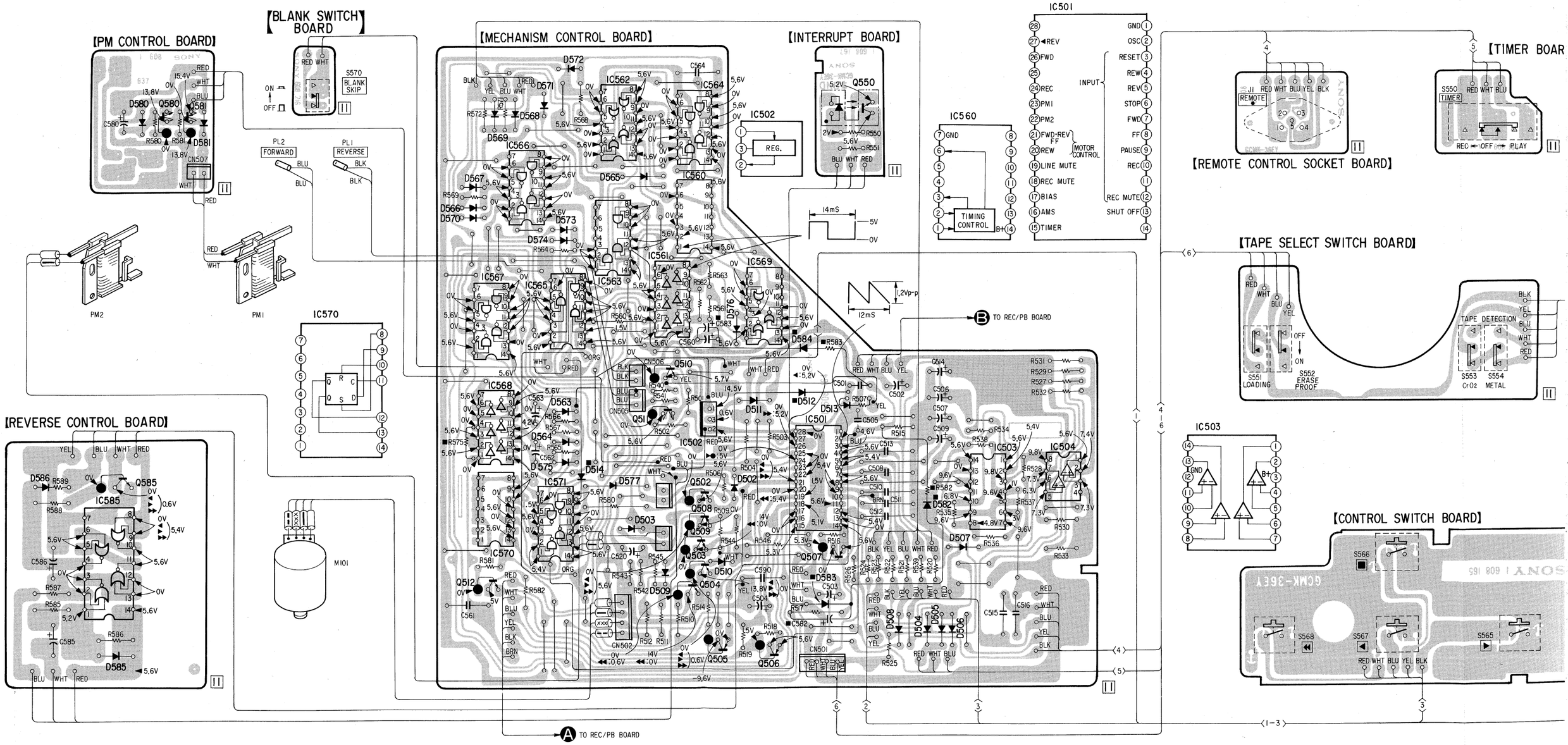

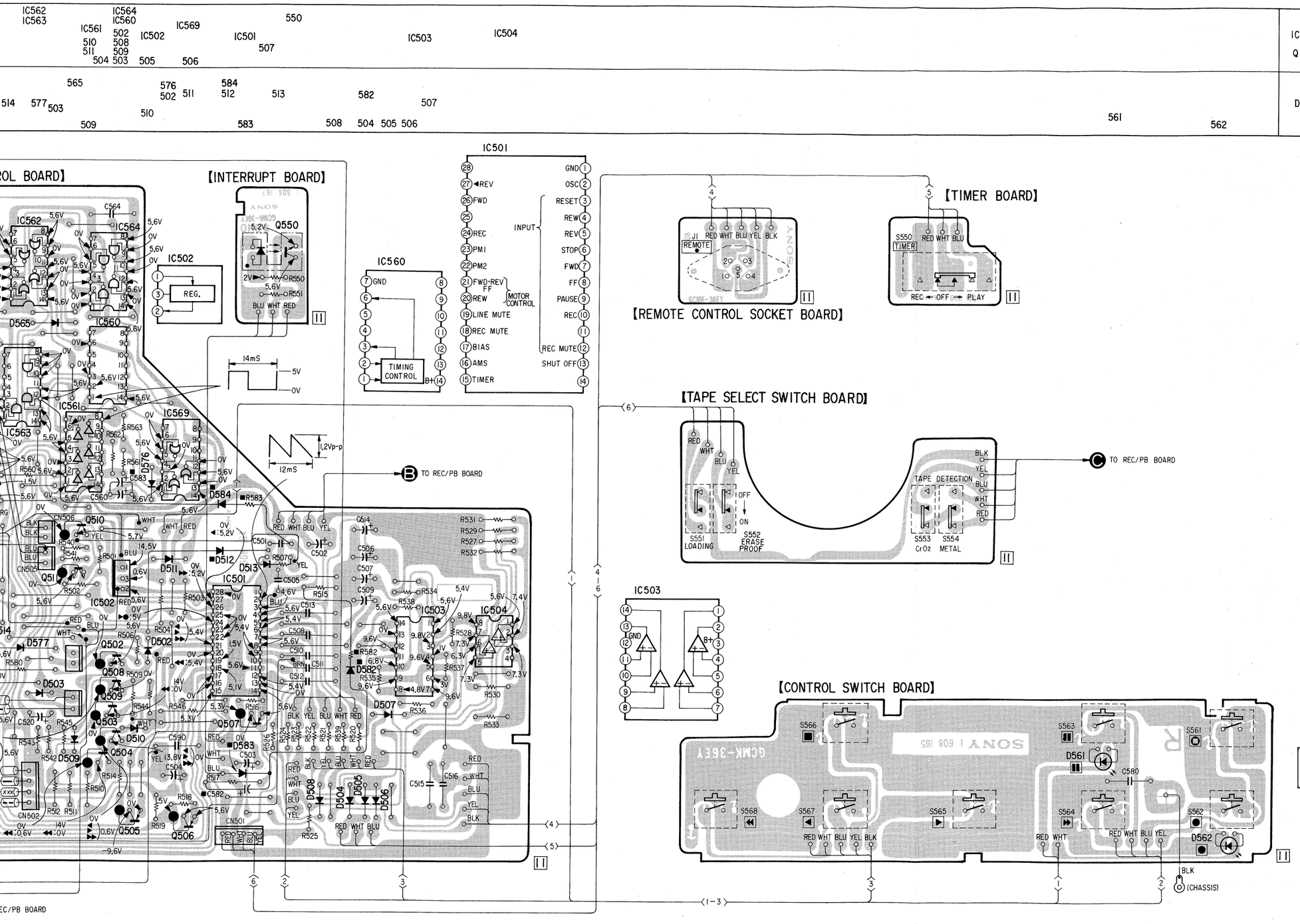

MOUNTING DIAGRAM
—System Control section—

Note:

- Color code of sleeving over the end of the jacket.

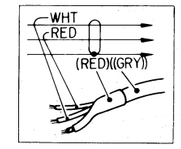

- ○— : parts extracted from the component side.
- ●— : parts extracted from the conductor side.
- ■ : part mounted on the conductor side.
- [ ]— : indicates side identified with part number.
- ▒ : B + pattern

SCHEMATIC DIAGRAM
—System Control section—

Note:

- All capacitors are in μF unless otherwise noted. pF: μμF 50WV or less are not indicated except for electrolytics and tantalums.
- ——— : B+ bus.
- Readings are taken under no-signal conditions with a VOM (50 kΩ/V).
- Switches

Ref. No.	Switch	Position
S301	FILTER	OFF
S302	DOLBY NR	OFF
S303	DOLBY B, C-TYPE	B-TYPE
S304	TAPE SELECT	AUTO
S305	POWER	OFF
S550	TIMER	OFF
S551	LOADING	OFF
S552	ERASE PROOF	OFF
S553	TAPE DETECTING (CrO_2)	OFF
S554	TAPE DETECTING METAL	OFF

Note: Voltages are measured with a VOM (50kΩ/V).

IC BLOCK DIAGRAMS

IC 101,201

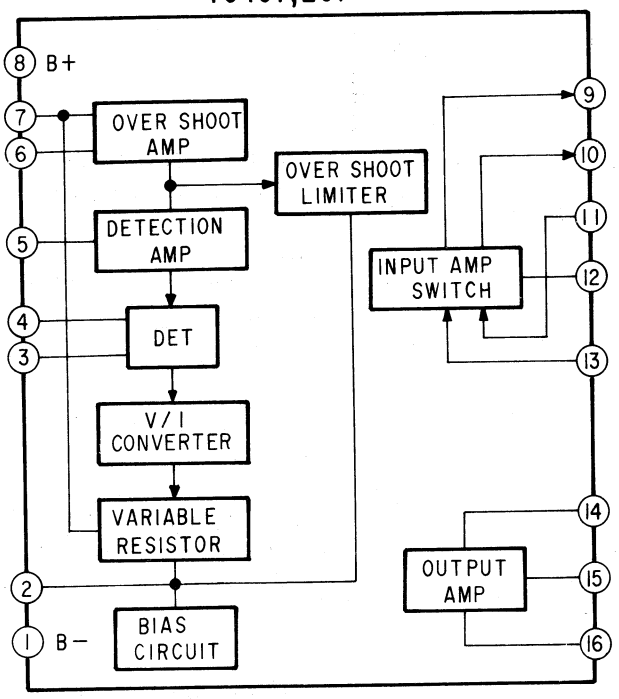

IC102,202

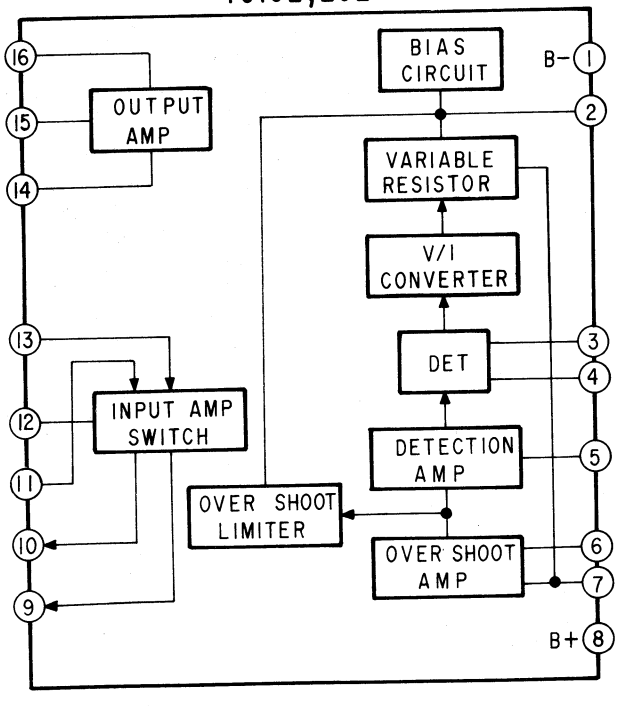

MEMO

SECTION 5
EXPLODED VIEWS AND PARTS LIST

5-1. EXPLODED VIEWS

(1)

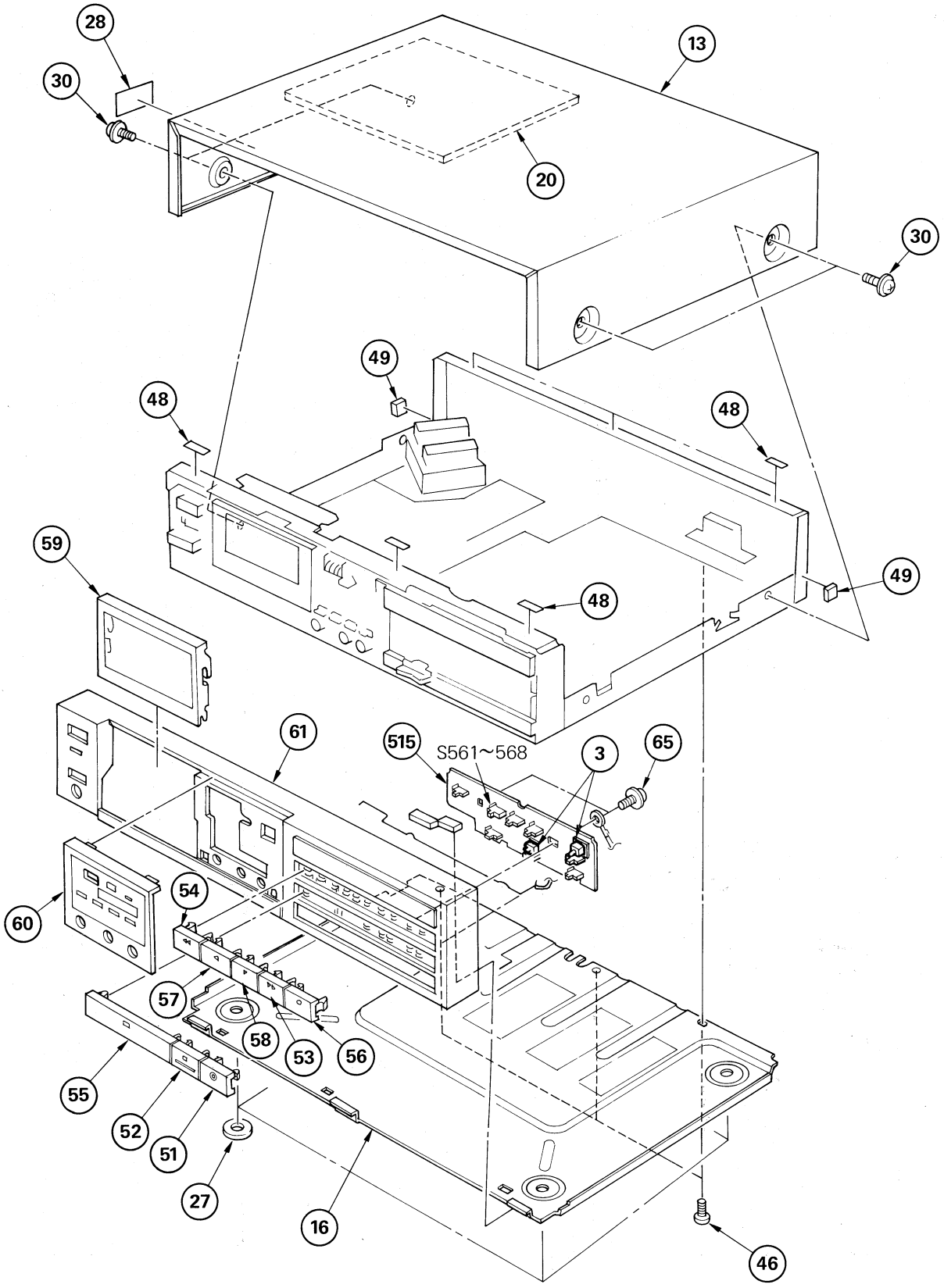

(2)

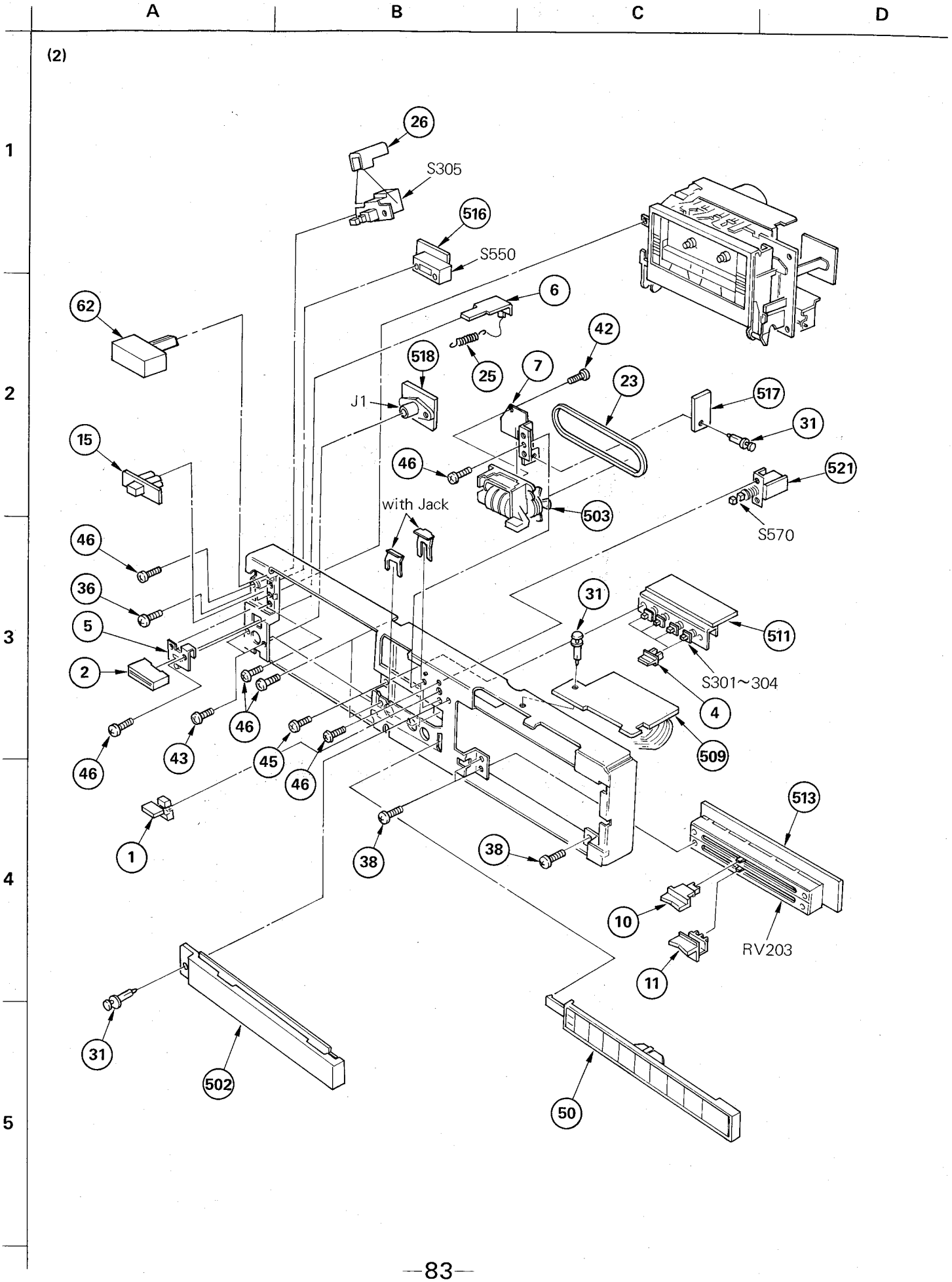
A
B
C
D
1
2
3
4
5
26
S305
516
S550
6
62
42
518
25
7
23
J1
517
31
15
46
521
with Jack
503
S570
46
36
31
5
511
2
S301~304
4
46
43
45
46
509
46
513
1
38
38
10
RV203
11
31
502
50

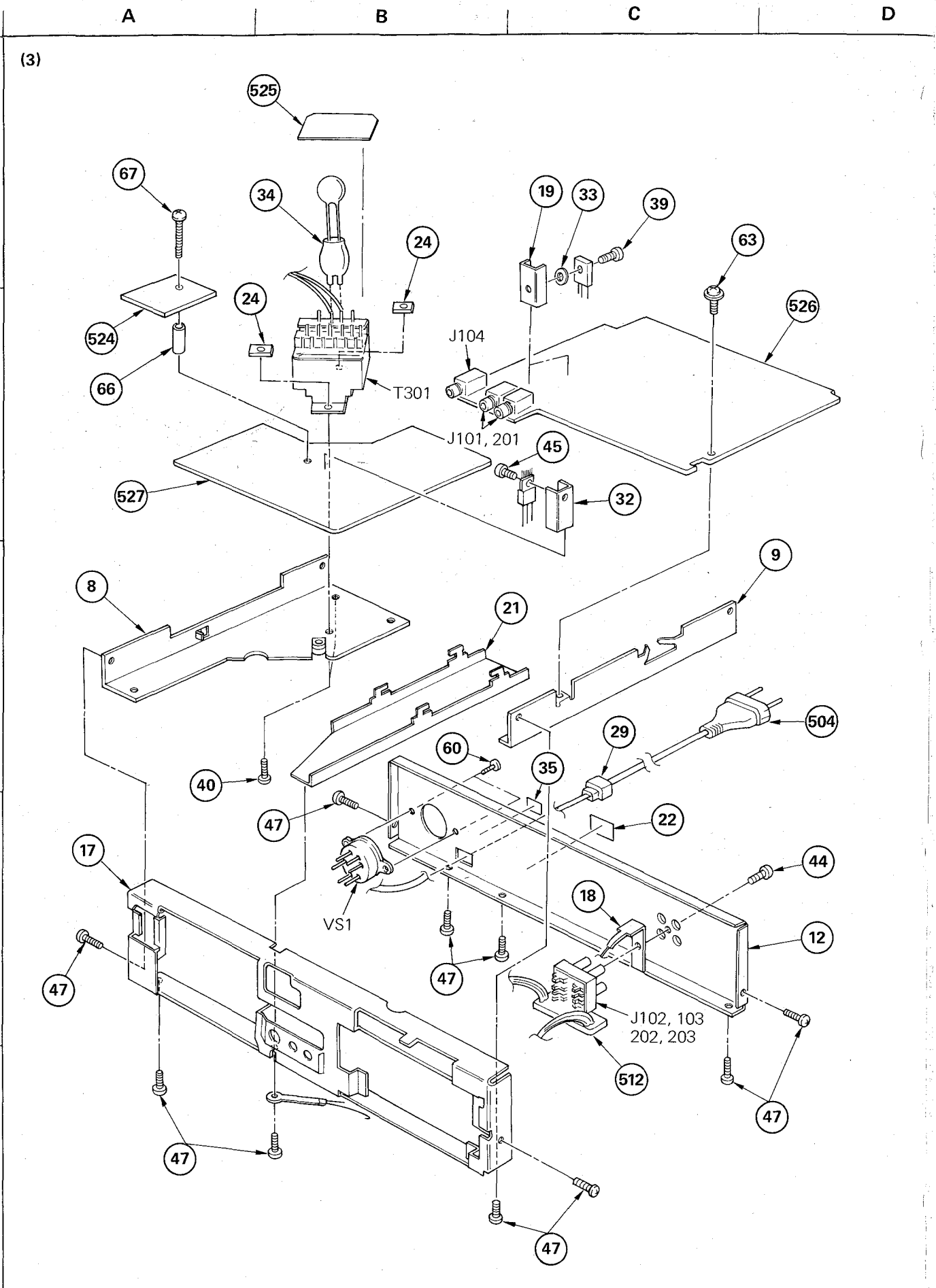
A
B
C
D
1
2
3
4
5
(3)
525
67
34
24
24
19
33
39
63
526
524
66
T301
J104
J101, 201
45
32
527
8
9
21
504
29
60
35
40
47
22
17
44
18
VS1
12
47
47
J102, 103
202, 203
512
47
47
47

(4)

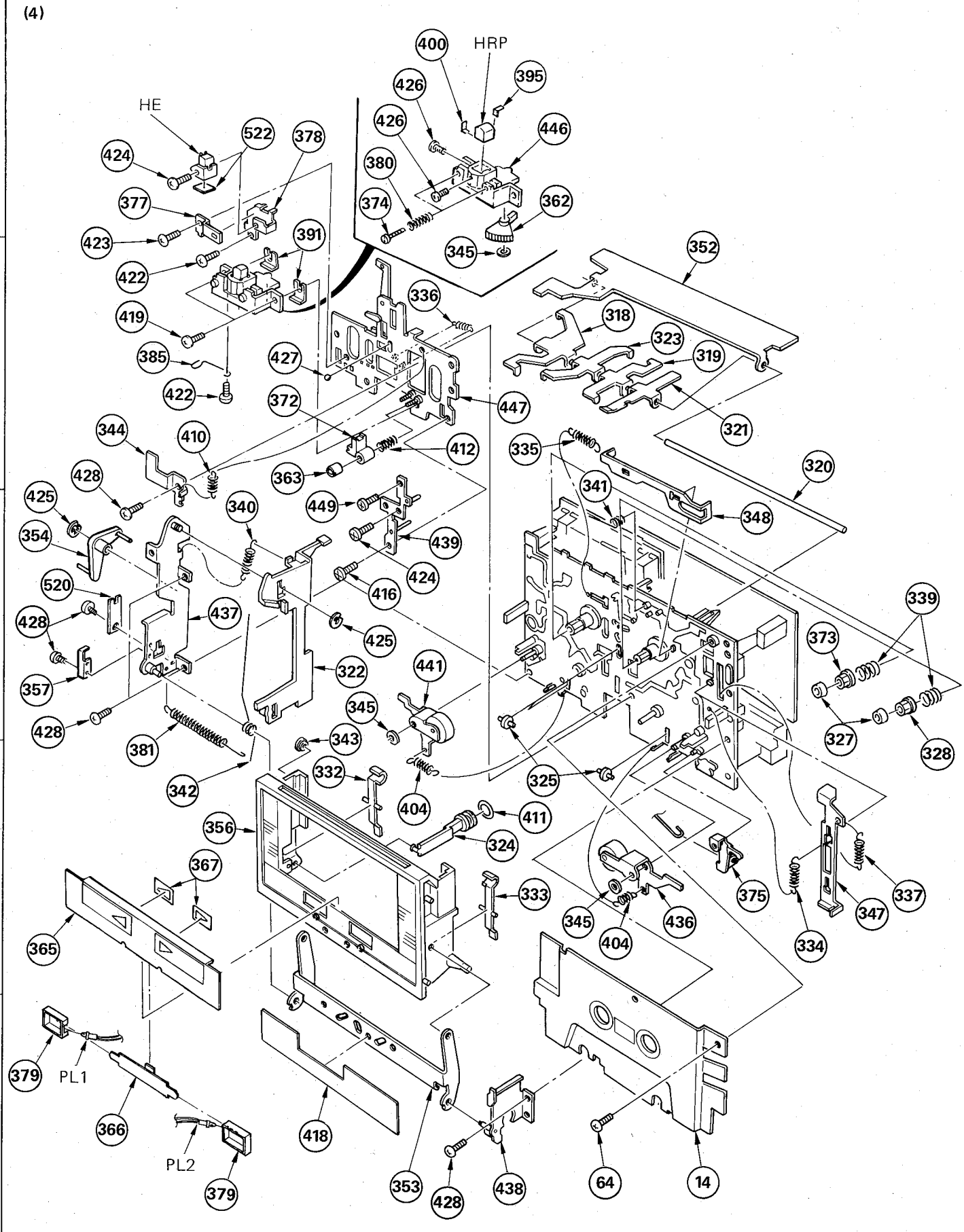
A
B
C
D
1
2
3
4
5
HE
HRP
PL1
PL2
400
395
426
426
446
380
374
362
345
522
378
424
377
423
391
422
419
385
422
336
427
447
372
412
344
410
363
428
425
340
449
439
424
416
354
520
437
428
425
357
322
441
345
428
381
343
342
332
404
411
356
324
367
333
365
379
366
418
353
428
438
64
14
352
318
323
319
321
335
320
341
348
339
373
327
328
325
375
337
347
334
345
404
436

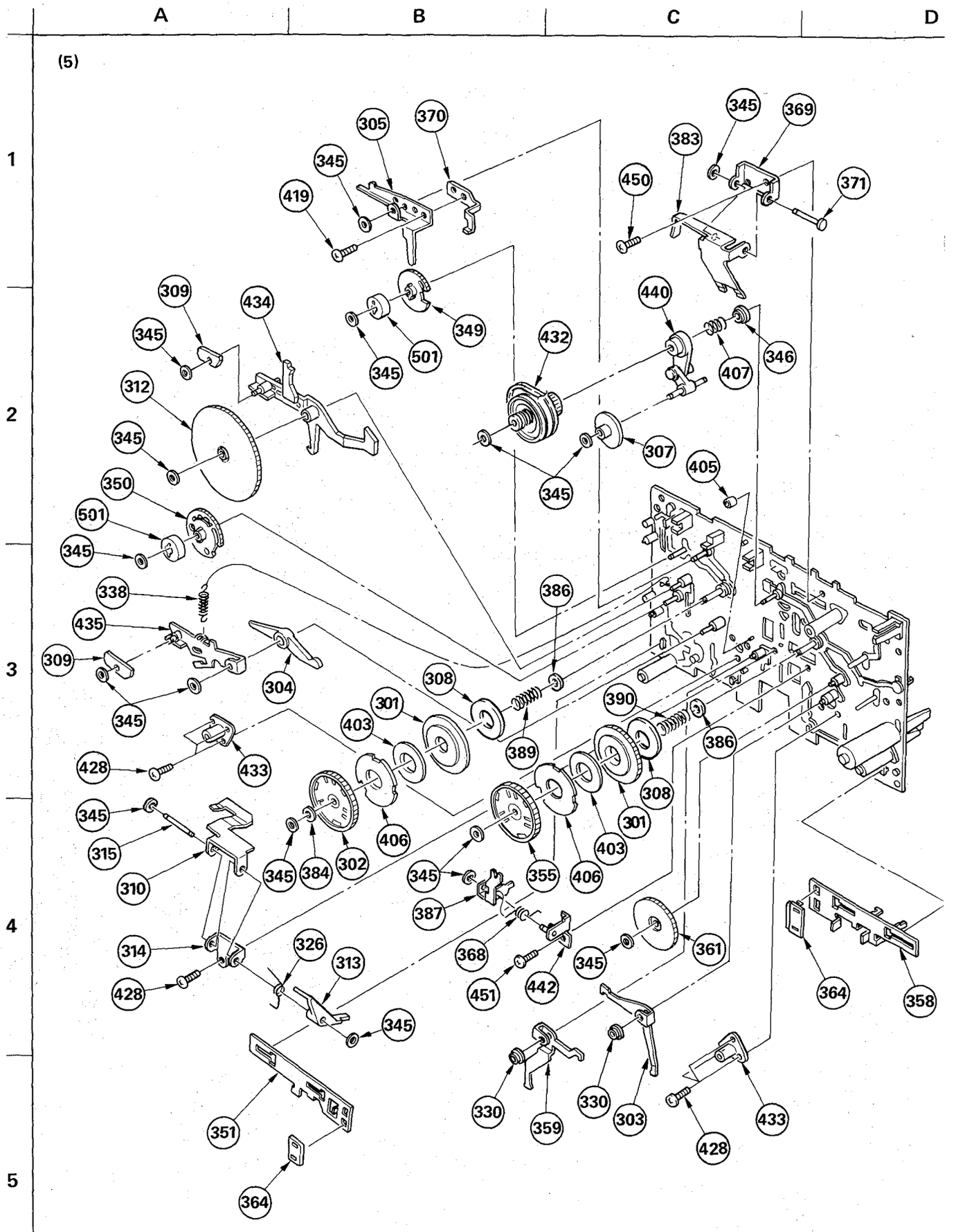
A
B
C
D
1
2
3
4
5
(5)
305
370
345
419
345
369
383
450
371
309
434
345
349
501
345
432
440
346
407
312
345
307
345
405
350
501
345
338
386
435
309
304
308
301
390
345
403
389
386
428
433
308
345
301
315
406
403
310
345
384
302
345
355
406
387
314
326
313
368
361
345
428
451
442
364
358
345
330
330
303
433
351
359
428
364

(6)

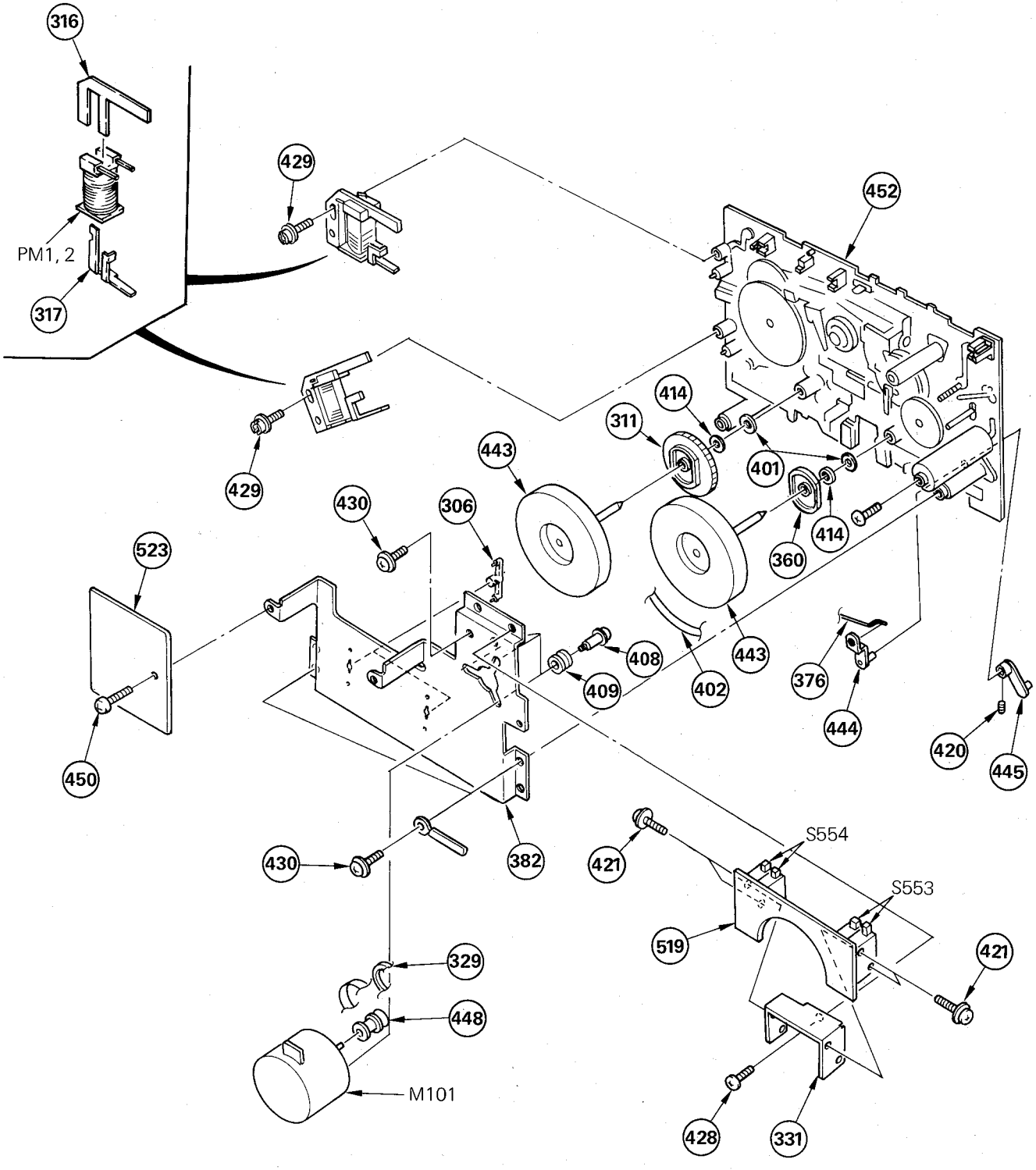
316
PM1, 2
317
429
429
452
414
311
443
401
414
360
430
306
523
408
409
402
443
376
444
420
445
450
430
382
421
S554
S553
519
421
329
448
M101
428
331

5-2. PARTS LIST

GENERAL SECTION

No.	Part No.	Description
1	3-304-401-11	KNOB, TAPE SELECT
2	3-304-419-00	BUTTON, EJECT
3 ♦	3-307-417-00	RETAINER, LED
4	3-307-515-11	BUTTON, DOLBY
5 ♦	3-307-517-00	GUIDE, SLIDER
6 ♦	3-307-518-00	PLATE, SLIDE
7 ♦	3-307-519-00	BRACKET, COUNTER
8 ♦	3-307-525-11	PLATE, SIDE, LEFT
9 ♦	3-307-526-00	PLATE, SIDE, RIGHT
10	3-307-528-00	KNOB (LEFT), REC CONTROL
11	3-307-529-00	KNOB (RIGHT), REC CONTROL
12 ♦	3-307-530-11	(US,Canadian,AEP,UK)...PLATE, JACK
12 ♦	3-307-530-21	(E).....PLATE, JACK
13	3-307-532-00	CASE
14	3-307-533-11	PLATE, ORNAMENTAL, MD
15	3-307-538-11	KNOB, SWITCH, TIMER
16 ♦	3-307-540-00	PLATE, BOTTOM
17 ♦	3-307-541-00	CHASSIS, AMPLIFIER
18 ♦	3-307-558-00	PLATE, GROUND, PIN JACK
19 ♦	3-307-560-00	HEAT SINK
20 ♦	3-307-563-00	SHEET, VIBRATION PROOF
21 ♦	3-308-206-00	PLATE, RELAY
22	3-308-208-00	(US,Canadian)...LABEL, MODEL NUMBER
22	3-308-209-00	(AEP).....LABEL, MODEL NUMBER
22	3-308-210-00	(UK).....LABEL, MODEL NUMBER
22	3-308-214-00	(E).....LABEL, MODEL NUMBER
23	3-480-135-00	BELT
24	3-536-212-00	NUT, PLATE
25	3-540-244-00	SPRING, TENSION
26	3-575-524-00	COVER, POWER SWITCH
27	3-576-731-00	FELT (H)
28	3-703-079-21	(US,UK)....LABEL, CAUTION (BACK)
29	3-703-244-00	BUSHING, CORD
30	3-703-354-11	SCREW (OS), CASE, CLAW
31	4-812-134-00	RIVET NYLON, 3.5
32 ♦	4-854-790-00	HEAT SINK
33	3-572-365-00	SHEET INSULATOR
34	4-875-455-00	(UK)....COVER CAPACITOR
35	3-703-456-00	(AEP,UK)....AMS LICENSE
36	7-621-770-87	SCREW +P 2.6X5
37	7-623-508-01	LUG, 3
38	7-682-646-01	SCREW +PS 3X5
39	7-682-547-09	SCREW +B 3X6
40	7-682-948-01	SCREW +PSW 3X8

GENERAL SECTION

No.	Part No.	Description
41	7-685-532-19	SCREW +BTP 2.6X5 TYPE2 N-S
42	7-685-533-21	SCREW +BTP 2.6X6 TYPE2 N-S
43	7-685-534-24	SCREW +P 2.6X8 TYPE2 SLIT
44	7-685-546-19	SCREW +BTP 3X8 TYPE2 N-S
45	7-685-871-01	SCREW +BVTT 3X6 (S)
46	7-685-871-09	SCREW +BVTT 3X6 (S)
47	7-685-872-01	SCREW +BVTT 3X8 (S)
48	9-911-837-XX	CUSHION, FILTER
49	9-911-840-XX	RUBBER (B)
50	X-3307-501-0	PLATE ASSY, ORNAMENTAL, BUTTON
51	X-3307-503-0	BUTTON ASSY, REC MUTE
52	X-3307-504-0	BUTTON ASSY, PAUSE
53	X-3307-505-0	BUTTON ASSY, FF
54	X-3307-506-0	BUTTON ASSY, REW
55	X-3307-508-0	BUTTON ASSY, STOP
56	X-3307-509-0	BUTTON ASSY, REC
57	X-3308-201-0	BUTTON ASSY, FWD
58	X-3308-202-0	BUTTON ASSY, REV
59	X-3308-203-0	WINDOW ASSY, CASSETTE
60	X-3308-204-0	ESCUTCHEON ASSY
61	A-2310-204-A	PANEL ASSY, FRONT
62	X-3575-502-0	KNOB ASSY, POWER
63	3-703-249-01	SCREW +PTTWH 3X6
64	7-685-103-69	SCREW +P 2X5
65	7-687-246-21	SCREW PTPWH 3X8
66	3-002-407-11	COLLER
67	7-685-876-01	SCREW +BVTT 3X16

NOTE:

- Items with no part number and no description are not stocked because they are seldom required for routine service.
- Items marked " ♦ " are not stocked since they are seldom required for routine service. Some delay should be anticipated when ordering these items.
- Due to standardization, parts with part numbers (Δ-ΔΔΔ-ΔΔΔ-XX or Δ-ΔΔΔΔ-ΔΔΔ-X) may be different from those used in the set.

SEMICONDUCTORS

In each case, U : μ, for example:
UA···: μA···, UPA···: μPA···, UPC···: μPC, UPD···: μPD···

CAPACITORS:

- All capacitors are in μF. Common capacitors are omitted. Refer to the following lists for their part numbers. MF: μF, PF: μμF.

RESISTORS

- All resistors are in ohms. Common 1/4W, 1/8W and 1/16W carbon resistors are omitted. Refer to the following lists for their part numbers.
- F : nonflammable

COILS

- MMH : mH, UH : μH

ACCESSORY & PACKING MATERIAL

No.	Part No.	Description
101	1-551-734-11	CORD, CONNECTION (RK- 74A)
102	3-307-554-00	CUSHION (RIGHT), UPPER
103	3-307-555-00	CUSHION (LEFT), UPPER
104	3-307-556-00	CUSHION (RIGHT), LOWER
105	3-307-557-00	CUSHION (LEFT), LOWER
106	3-307-562-00	LABEL, CAUTION, TAPE SELECT
107	3-308-212-00	INDIVIDUAL CARTON
108	3-701-630-00	BAG, POLYETHYLENE
109	3-773-093-11	(Canadian,AEP,UK,E)...MANUAL, INSTRUCTION
109	3-773-093-21	(US).....MANUAL, INSTRUCTION
111	3-793-828-11	QUESTIONNAIRE
112	4-876-352-00	SHEET, PROTECTION
113	8-890-454-10	(Canadian)...TAPE
114	X-3701-105-0	ROD ASSY, CLEANING, HEAD

MECHANISM SECTION

No.	Part No.	Description
301	3-307-302-00	MAGNET, REEL TABLE
302	3-307-305-02	GEAR (T), REEL
303 ♦	3-307-306-00	LEVER, SELECT, REVERSE
304	3-307-307-00	LEVER, FWD
305 ♦	3-307-308-00	LEVER, FF
306	3-307-309-00	RETAINER (A), THRUST
307	3-307-312-00	GEAR, FR
308	3-307-313-00	PLATE, YOKE
309	3-307-315-00	ARBOR, MOVABLE
310	3-307-319-00	RETAINER, TAKE-UP GEAR
311	3-307-320-00	GEAR (T), PINION
312	3-307-321-00	GEAR (T), DRIVING
313	3-307-328-00	LEVER, TAKE-UP SELECTION
314 ♦	3-307-329-00	PLATE, FULCRUM,SELECTION LEVER
315	3-307-330-00	PIN, FULCRUM PLATE
316	3-307-332-00	ARBOR, FIXED
317	3-307-333-00	ARBOR, TRIGGER
318 ♦	3-307-337-00	LEVER, REC DETECTION
319 ♦	3-307-338-00	LEVER, METAL DETECTION
320 ♦	3-307-339-00	SHAFT, DETECTION LEVER
321 ♦	3-307-344-00	LEVER, HALF RETAINER
322	3-307-345-00	SLIDER, EJECT
323 ♦	3-307-346-00	LEVER, DETECTION
324	3-307-347-00	PISTON
325	3-307-348-00	ROLLER
326	3-307-355-00	SPRING
327	3-307-362-00	CAP, REEL
328	3-307-363-00	CLAW (N), REEL
329	3-307-366-00	BELT, FAST FORWARD
330	3-307-367-00	BUSHING, SELECT LEVER
331 ♦	3-307-370-00	BRACKET, SWITCH
332	3-307-371-00	SPRING (LEFT)
333	3-307-372-00	SPRING (RIGHT)
334	3-307-373-00	SPRING, TENSION
335	3-307-374-00	SPRING, TENSION
336	3-307-375-00	SPRING, TENSION
337	3-307-377-00	SPRING, TENSION
338	3-307-378-00	SPRING, TENSION
339	3-307-380-00	SPRING, COMPRESSION
340	3-307-381-00	SPRING, TENSION
341	3-307-382-00	SPRING
342	3-307-383-00	SPRING
343	3-307-390-00	BUSHING, LOADING SPRING
344	3-307-391-00	RETAINER
345	3-307-394-00	RETAINER (B), THRUST

NOTE:

- Items with no part number and no description are not stocked because they are seldom required for routine service.
- Items marked " ♦ " are not stocked since they are seldom required for routine service. Some delay should be anticipated when ordering these items.
- Due to standardization, parts with part numbers (Δ-ΔΔΔ-ΔΔΔ-XX or Δ-ΔΔΔΔ-ΔΔΔ-X) may be different from those used in the set.

SEMICONDUCTORS

In each case, U : μ, for example:
UA···: μA···, UPA···: μPA···, UPC···: μPC, UPD···: μPD···

CAPACITORS:

- All capacitors are in μF. Common capacitors are omitted. Refer to the following lists for their part numbers. MF: μF, PF: μμF.

RESISTORS

- All resistors are in ohms. Common 1/4W, 1/8W and 1/16W carbon resistors are omitted. Refer to the following lists for their part numbers.
- F : nonflammable

COILS

- MMH : mH, UH : μH

MECHANISM SECTION

No.	Part No.	Description
346	3-307-395-00	RETAINER, SPRING
347	3-307-397-00	SLIDER, PAUSE
348 ♣	3-307-399-00	SLIDER, MODE
349	3-307-401-00	GEAR, FF CAM
350	3-307-402-00	GEAR, FWD CAM
351 ♣	3-307-403-00	SLIDER, FWD
352 ♣	3-307-404-00	RETAINER, DETECTION SWITCH
353 ♣	3-307-405-00	PLATE, FULCRUM, CASSETTE HOLDER
354	3-307-406-00	LEVER, EJECT
355	3-307-412-00	GEAR, TAKE-UP REEL
356	3-307-415-00	HOLDER, CASSETTE
357	3-307-416-00	STOPPER, LOADING
358 ♣	3-307-420-00	SLIDER, REVERSE
359 ♣	3-307-421-00	LEVER (R), FWD SELECTION
360	3-307-422-03	GEAR (S), PINION
361	3-307-423-02	GEAR (S), DRIVING
362	3-307-427-00	GEAR, HEAD, ROTARY
363	3-307-435-00	NUT, ADJUSTMENT, TAPE GUIDE
364 ♣	3-307-437-00	BLOCK, HEAD SELECTION
365	3-307-438-02	PLATE, ORNAMENTAL
366	3-307-439-00	HOLDER, LAMP
367	3-307-440-00	COVER, LAMP
368	3-307-441-00	SPRING
369 ♣	3-307-443-00	BRACKET, RETAINER, SUPPLY GEAR
370 ♣	3-307-444-00	LEVER, FF ASSIST
371 ♣	3-307-445-00	SHAFT, RETAINER, SUPPLY GEAR
372	3-307-446-00	GUIDE (R), TAPE
373	3-307-447-00	CLAW (R), REEL
374	3-307-448-00	SCREW, ADJUSTMENT, AZIMUTH
375 ♣	3-307-449-00	LEVER (R), PAUSE
376 ♣	3-307-450-02	ROD, PULL, PAUSE
377	3-307-457-00	SPRING
378	3-307-458-00	PLATE (L), ADJUSTMENT, HEAD
379	3-307-459-00	RUBBER, HOLDER
380	3-307-460-00	SPRING, COMPRESSION
381	3-307-461-00	SPRING, TENSION
382 ♣	3-307-462-00	RETAINER (R), THRUST
383 ♣	3-307-464-00	RETAINER, SUPPLY GEAR
384	3-307-465-00	RETAINER, TAKE-UP
385 ♣	3-307-466-00	CLAMP
386 ♣	3-307-467-00	RETAINER, SPRING
387	3-307-469-00	LEVER, SELECTION, SUPPLY
388	.....	
389	3-307-471-11	SPRING, COMPRESSION
390	3-307-471-21	SPRING, COMPRESSION

MECHANISM SECTION

No.	Part No.	Description
391	3-307-477-01	SHIM (A), HEAD ADJUSTMENT
391	3-307-477-11	SHIM (A), HEAD ADJUSTMENT
391	3-307-477-21	SHIM (A), HEAD ADJUSTMENT
391	3-307-477-31	SHIM (A), HEAD ADJUSTMENT
391	3-307-479-01	SHIM (B), HEAD ADJUSTMENT
395	3-307-479-11	SHIM (B), HEAD ADJUSTMENT
395	3-307-479-21	SHIM (B), HEAD ADJUSTMENT
395	3-307-479-31	SHIM (B), HEAD ADJUSTMENT
395	3-307-480-02	SHIM, HEAD
400	3-307-481-00	BASE, HEAD
401	3-307-482-00	WASHER, LUMILER
402	3-307-483-00	BELT (R), CAPSTAN
403	3-307-958-00	WASHER, POLYETHYLENE
404	3-527-189-00	SPRING, TENSION
405	3-538-051-00	RUBBER, BRAKE
406	3-561-827-00	PLATE (A), HYSTERESIS
407	3-566-903-00	SPRING
408	3-570-027-00	SCREW, MOTOR
409	3-570-118-00	CUSHION, MOTOR
410	3-570-914-00	SPRING, TENSION
411	3-575-392-00	RING, PISTON
412	3-644-718-00	SPRING, COMPRESSION
413	3-701-438-11	WASHER, 2.5
414	3-701-438-21	WASHER, 2.5
415	.....	
416	3-701-467-00	SCREW, LOCK
417	.....	
418	3-831-441-XX	PLATE, BLIND
419	7-621-259-25	SCREW +P 2.6X4
420	7-621-732-08	SET-SCT, HEX. 2X3 FLAT POINT
421	7-621-760-05	+PSW, 2.6X16
422	7-621-772-00	SCREW +B 2X3
423	7-621-772-10	SCREW +B 2X4
424	7-621-772-40	SCREW +B 2X8
425	7-624-105-04	STOP RING 2.3, TYPE -E
426	7-627-552-07	SCREW, PRECISION +P 1.7X2.5
427	7-671-111-11	STEEL, BALL 1.5MM
428	7-685-860-01	SCREW +BVTT 2.6X4 (S)
429	7-687-204-21	TOTSU PTPWH 2X6 NON-SLIT, TYPE2
430	7-687-246-11	SCREW, TOTSU PTPWH 3X8, TYPE2
431	7-687-701-39	SCREW, TOTSU BTT 2.6X4
432	A-2142-022-A	PULLEY ASSY, FR
433	X-3307-303-0	BEARING ASSY, CAPSTAN
434	X-3307-304-0	LEVER ASSY, FF LOCK
435 ♣	X-3307-305-0	LEVER ASSY, FWD LOCK

NOTE:
- Items with no part number and no description are not stocked because they are seldom required for routine service.
- Items marked " ♣ " are not stocked since they are seldom required for routine service. Some delay should be anticipated when ordering these items.
- Due to standardization, parts with part numbers (Δ-ΔΔΔ-ΔΔΔ-XX or Δ-ΔΔΔΔ-ΔΔΔ-X) may be different from those used in the set.

SEMICONDUCTORS
In each case, U : μ, for example:
UA···: μA···, UPA···: μPA···, UPC···: μPC, UPD···: μPD···

CAPACITORS:
- All capacitors are in μF. Common capacitors are omitted. Refer to the following lists for their part numbers. MF: μF, PF: μμF.

RESISTORS
- All resistors are in ohms. Common 1/4W, 1/8W and 1/16W carbon resistors are omitted. Refer to the following lists for their part numbers.
- F : nonflammable

COILS
- MMH : mH, UH : μH

MECHANISM SECTION

No.	Part No.	Description
436	X-3307-307-0	PINCH ROLLER (N) ASSY
437 ♦	X-3307-309-0	PLATE (LEFT) ASSY, SIDE
438 ♦	X-3307-310-0	PLATE (RIGHT) ASSY, SIDE
439	X-3307-311-2	PLATE ASSY (AMS), ADJUSTMENT
440	X-3307-312-0	LEVER ASSY, FR
441	X-3307-316-0	PINCH ROLLER (R) ASSY
442 ♦	X-3307-317-0	PLATE ASSY, FULCRUM, LEVER
443 ♦	X-3307-318-0	FLYWHEEL (R)-1 ASSY
444 ♦	X-3307-319-0	ARM (A) ASSY, PAUSE
445 ♦	X-3307-320-0	ARM (B) ASSY, PAUSE
446	X-3307-321-2	HOLDER ASSY, HEAD
447	X-3307-323-0	CHASSIS (R) ASSY, HEAD
448	X-3307-329-0	PULLEY (R) ASSY, MOTOR
449	7-621-555-30	SCREW +K 2X5
450	7-685-861-01	SCREW +BVTT 2.6X5
451	7-687-701-31	SCREW +BVTT 2.6X4
452	X-3307-331-1	CHASSIS MECHANISM

ELECTRICAL PARTS

Ref.No.	Part No.	Description
501	1-452-202-00	MAGNET
502	1-520-453-00	METER UNIT, LED LEVEL
503	1-548-536-71	COUNTER
504 ⚠	1-534-817-XX	(AEP).....CORD, POWER
504 ⚠	1-551-472-00	(E2).....CORD, POWER
504 ⚠	1-551-506-XX	(US,Canadian)...CORD, POWER
504 ⚠	1-551-962-00	(UK).....CORD, POWER
504 ⚠	1-555-734-00	(E1).....CORD, POWER
505	.....	
506 ♦	1-560-603-00	PIN, CONNECTOR 4P
507 ♦	1-560-708-00	PIN, CONNECTOR 2P
508	.....	
509 ♦	1-607-999-00	PC BOARD, METER DRIVE
510	.....	
511 ♦	1-608-002-00	PC BOARD, DOLBY SW
512 ♦	1-608-003-00	PC BOARD, PIN JACK
513 ♦	1-608-004-00	PC BOARD, REC VOL
514	.....	
515 ♦	1-608-165-00	PC BOARD, CONTROL SWITCH
516 ♦	1-608-166-00	PC BOARD, TIMER SWITCH
517 ♦	1-608-167-00	PC BOARD, INTERRUPT
518 ♦	1-608-168-00	PC BOARD, REMOTE CONTROL
519 ♦	1-608-169-00	PC BOARD, TAPE SELECT SWITCH
520 ♦	1-608-170-00	PC BOARD, HEAD TRANSLATION
521 ♦	1-608-216-00	PC BOARD, BLANK SW
522 ♦	1-608-268-00	PC BOARD, ERASE HEAD
523	1-608-707-00	PC BOARD, REVERSE CONTROL
524	1-608-637-00	PC BOARD, PM CONTROL
525	1-608-860-00	(E)...PC BOARD, POWER
526 ♦	A-2056-171-A	PC BOARD ASSY, AUDIO
527 ♦	A-2056-172-A	PC BOARD ASSY, MECH CONTROL

C109	1-130-630-00	FILM	0.068MF	5%	50V
C112	1-130-635-00	FILM	0.18MF	5%	50V
C113	1-130-632-00	FILM	0.1MF	5%	50V
C114	1-130-634-00	FILM	0.15MF	5%	50V
C115	1-130-632-00	FILM	0.1MF	5%	50V
C116	1-130-633-00	FILM	0.12MF	5%	50V
C118	1-130-621-00	FILM	0.012MF	5%	50V
C120	1-130-631-00	FILM	0.082MF	5%	50V
C121	1-130-629-00	FILM	0.056MF	5%	50V
C122	1-130-628-00	FILM	0.047MF	5%	50V
C126	1-130-621-00	FILM	0.012MF	5%	50V
C128	1-130-627-00	FILM	0.039MF	5%	50V
C130	1-130-627-00	FILM	0.039MF	5%	50V
C132	1-130-627-00	FILM	0.039MF	5%	50V
C135	1-130-634-00	FILM	0.15MF	5%	50V

NOTE:

- Items with no part number and no description are not stocked because they are seldom required for routine service.
- Items marked " ♦ " are not stocked since they are seldom required for routine service. Some delay should be anticipated when ordering these items.
- Due to standardization, parts with part numbers (Δ-ΔΔΔ-ΔΔΔ-XX or Δ-ΔΔΔΔ-ΔΔΔ-X) may be different from those used in the set.

SEMICONDUCTORS

In each case, U : μ, for example:
UA···: μA···, UPA···: μPA···, UPC···: μPC, UPD···: μPD···

CAPACITORS:

- All capacitors are in μF. Common capacitors are omitted. Refer to the following lists for their part numbers. MF: μF, PF: μμF.

RESISTORS

- All resistors are in ohms. Common 1/4W, 1/8W and 1/16W carbon resistors are omitted. Refer to the following lists for their part numbers.
- F : nonflammable

COILS

- MMH : mH, UH : μH

ELECTRICAL PARTS

Ref.No.	Part No.	Description			
C136	1-130-628-00	FILM	0.047MF	5%	50V
C137	1-130-625-00	FILM	0.027MF	5%	50V
C139	1-130-633-00	FILM	0.12MF	5%	50V
C140	1-130-631-00	FILM	0.082MF	5%	50V
C141	1-130-622-00	FILM	0.015MF	5%	50V
C143	1-130-623-00	FILM	0.018MF	5%	50V
C147	1-107-165-00	MICA	56PF	5%	500V
C150	1-130-624-00	FILM	0.022MF	5%	50V
C157	1-107-167-00	MICA	75PF	5%	500V
C209	1-130-630-00	FILM	0.068MF	5%	50V
C212	1-130-635-00	FILM	0.18MF	5%	50V
C213	1-130-632-00	FILM	0.1MF	5%	50V
C214	1-130-634-00	FILM	0.15MF	5%	50V
C215	1-130-632-00	FILM	0.1MF	5%	50V
C216	1-130-633-00	FILM	0.12MF	5%	50V
C218	1-130-621-00	FILM	0.012MF	5%	50V
C220	1-130-631-00	FILM	0.082MF	5%	50V
C221	1-130-629-00	FILM	0.056MF	5%	50V
C222	1-130-628-00	FILM	0.047MF	5%	50V
C226	1-130-621-00	FILM	0.012MF	5%	50V
C228	1-130-627-00	FILM	0.039MF	5%	50V
C230	1-130-627-00	FILM	0.039MF	5%	50V
C232	1-130-627-00	FILM	0.039MF	5%	50V
C235	1-130-634-00	FILM	0.15MF	5%	50V
C236	1-130-628-00	FILM	0.047MF	5%	50V
C237	1-130-625-00	FILM	0.027MF	5%	50V
C239	1-130-633-00	FILM	0.12MF	5%	50V
C240	1-130-631-00	FILM	0.082MF	5%	50V
C241	1-130-622-00	FILM	0.015MF	5%	50V
C243	1-130-623-00	FILM	0.018MF	5%	50V
C247	1-107-165-00	MICA	56PF	5%	500V
C250	1-130-624-00	FILM	0.022MF	5%	50V
C257	1-107-167-00	MICA	75PF	5%	500V
C323	1-130-620-00	FILM	0.01MF	5%	50V
C326	1-130-291-00	FILM	0.0056MF	5%	100V
C327	1-130-291-00	FILM	0.0056MF	5%	100V
C328	1-130-295-00	FILM	0.0082MF	5%	100V
C330	1-129-713-00	FILM	0.0082MF	10%	630V
C331	1-130-626-00	FILM	0.033MF	5%	50V
C351 △	1-161-744-00	(AEP,UK,E).....CAP, CERAMIC 10000PF			
C351 △	1-161-749-00	(US,Canadian)...CAP, CERAMIC 10000PF			
♦CNP301	1-560-605-00	PIN, CONNECTOR 6P			
♦CNP302	1-560-603-00	PIN, CONNECTOR 4P			
♦CNP303	1-560-603-00	PIN, CONNECTOR 4P			
♦CNP304	1-560-603-00	PIN, CONNECTOR 4P			
♦CNP305	1-560-604-00	PIN, CONNECTOR 5P			

ELECTRICAL PARTS

Ref.No.	Part No.	Description
CT101	1-141-225-21	CAP, TUNING, TRIMAR
CT201	1-141-225-21	CAP, TUNING, TRIMAR
D301	8-719-815-55	DIODE 1S1555
D302	8-719-815-55	DIODE 1S1555
D303	8-719-815-55	DIODE 1S1555
D304	8-719-200-02	DIODE 10E-2
D305	8-719-200-02	DIODE 10E-2
D306	8-719-200-02	DIODE 10E-2
D307	8-719-200-02	DIODE 10E-2
D308	8-719-200-02	DIODE 10E-2
D309	8-719-200-02	DIODE 10E-2
D310	8-719-200-02	DIODE 10E-2
D311	8-719-815-55	DIODE 1S1555
D312	8-719-990-64	DIODE HZ6B1L
D313	8-719-815-55	DIODE 1S1555
D314	8-719-815-55	DIODE 1S1555
D315	8-719-815-55	DIODE 1S1555
D316	8-719-815-55	DIODE 1S1555
D317	8-719-910-14	DIODE HZ11B1L
D319	8-719-910-14	DIODE HZ11B1L
D320	8-719-815-55	DIODE 1S1555
D502	8-719-901-33	DIODE 1SS133
D503	8-719-901-33	DIODE 1SS133
D504	8-719-901-33	DIODE 1SS133
D505	8-719-901-33	DIODE 1SS133
D506	8-719-901-33	DIODE 1SS133
D507	8-719-901-33	DIODE 1SS133
D508	8-719-901-33	DIODE 1SS133
D509	8-719-901-33	DIODE 1SS133
D510	8-719-901-33	DIODE 1SS133
D511	8-719-901-33	DIODE 1SS133
D512	8-719-901-33	DIODE 1SS133
D513	8-719-901-33	DIODE 1SS133
D560	8-719-934-05	DIODE SLR-34URC5
D561	8-719-902-78	DIODE SLR34DC5
D563	8-719-901-33	DIODE 1SS133
D564	8-719-901-33	DIODE 1SS133
D565	8-719-901-33	DIODE 1SS133
D566	8-719-901-33	DIODE 1SS133
D567	8-719-901-33	DIODE 1SS133
D568	8-719-901-33	DIODE 1SS133
D569	8-719-901-33	DIODE 1SS133
D570	8-719-901-33	DIODE 1SS133
D571	8-719-901-33	DIODE 1SS133

NOTE:
- Items with no part number and no description are not stocked because they are seldom required for routine service.
- Items marked " ♦ " are not stocked since they are seldom required for routine service. Some delay should be anticipated when ordering these items.
- Due to standardization, parts with part numbers (Δ-ΔΔΔ-ΔΔΔ-XX or Δ-ΔΔΔΔ-ΔΔΔ-X) may be different from those used in the set.

SEMICONDUCTORS
In each case, U : μ, for example:
UA···: μA···, UPA···: μPA···, UPC···: μPC, UPD···: μPD···

CAPACITORS:
- All capacitors are in μF. Common capacitors are omitted. Refer to the following lists for their part numbers.
MF: μF, PF: μμF.

RESISTORS
- All resistors are in ohms. Common 1/4W, 1/8W and 1/16W carbon resistors are omitted. Refer to the following lists for their part numbers.
- F : nonflammable

COILS
- MMH : mH, UH : μH

ELECTRICAL PARTS

Ref.No.	Part No.	Description
D572	8-719-901-33	DIODE 1SS133
D573	8-719-901-33	DIODE 1SS133
D574	8-719-901-33	DIODE 1SS133
D575	8-719-901-33	DIODE 1SS133
D576	8-719-901-33	DIODE 1SS133
D577	8-719-901-33	DIODE 1SS133
D578	8-719-901-33	DIODE 1SS133
D580	8-719-901-33	DIODE 1SS133
D581	8-719-901-33	DIODE 1SS133
D583	8-719-901-33	DIODE 1SS133
D585	8-719-901-33	DIODE 1SS133
D586	8-719-901-33	DIODE 1SS133
HE	8-825-535-20	HEAD, ERASE (ES237-36)
HRP	8-825-548-10	HEAD, R/P (PA242-3602)
IC101	8-759-100-74	IC CX174A
IC102	8-759-100-74	IC CX174A
IC201	8-759-100-74	IC CX174A
IC202	8-759-100-74	IC CX174A
IC301	8-759-700-39	IC NJM4562S-D
IC302	8-759-600-02	IC M5218L
IC501	8-759-200-63	IC TC9310N-001
IC502	8-759-170-05	IC UPC78M05H
IC503	8-759-133-90	IC UPC339C
IC504	8-759-729-03	IC NJM2903D
IC560	8-759-240-24	IC TC4024BP
IC561	8-759-240-69	IC TC4069UBP
IC562	8-759-240-01	IC TC4001BP
IC563	8-759-240-81	IC TC4081BP
IC564	8-759-240-11	IC TC4011BP
IC565	8-759-240-23	IC TC4023BP
IC566	8-759-240-11	IC TC4011BP
IC567	8-759-240-11	IC TC4011BP
IC568	8-759-240-69	IC TC4069UBP
IC569	8-759-240-01	IC TC4001BP
IC570	8-759-240-13	IC TC4013BP
IC571	8-759-240-11	IC TC4011BP
J1	1-561-965-00	SOCKET 5P
J101	1-507-797-00	JACK (LARGE)
J102	1-507-762-00	JACK, PIN 4P
J103	1-507-762-00	JACK, PIN 4P
J104	1-507-796-00	JACK
J201	1-507-797-00	JACK (LARGE)
J202	1-507-762-00	JACK, PIN 4P
J303	1-507-762-00	JACK, PIN 4P

ELECTRICAL PARTS

Ref.No.	Part No.	Description
L101	1-408-217-00	MICRO INDUCTOR 6.8MMH
L102	1-407-963-00	MICRO INDUCTOR 15MMH
L103	1-408-262-00	MICRO INDUCTOR 27MMH
L104	1-408-220-00	MICRO INDUCTOR 18MMH
L201	1-408-217-00	MICRO INDUCTOR 6.8MMH
L202	1-407-963-00	MICRO INDUCTOR 15MMH
L203	1-408-262-00	MICRO INDUCTOR 27MMH
L204	1-408-220-00	MICRO INDUCTOR 18MMH
L301	1-407-177-XX	MICRO INDUCTOR 470UH
LPF101	1-231-388-00	FILTER, LOWPASS
LPF201	1-231-388-00	FILTER, LOWPASS
M101	1-541-201-00	MOTOR
PL1	1-518-509-00	LAMP, PILOT
PL2	1-518-510-00	LAMP, PILOT
PM1	1-454-316-00	SOLENOID
PM2	1-454-316-00	SOLENOID
Q101	8-729-334-58	TRANSISTOR 2SC1345
Q102	8-729-334-58	TRANSISTOR 2SC1345
Q103	8-729-663-47	TRANSISTOR 2SC1364
Q104	8-729-663-47	TRANSISTOR 2SC1364
Q105	8-729-663-47	TRANSISTOR 2SC1364
Q106	8-729-663-47	TRANSISTOR 2SC1364
Q107	8-729-663-47	TRANSISTOR 2SC1364
Q108	8-729-663-47	TRANSISTOR 2SC1364
Q109	8-729-663-47	TRANSISTOR 2SC1364
Q110	8-729-663-47	TRANSISTOR 2SC1364
Q111	8-729-663-47	TRANSISTOR 2SC1364
Q112	8-729-663-47	TRANSISTOR 2SC1364
Q113	8-729-663-47	TRANSISTOR 2SC1364
Q114	8-729-663-47	TRANSISTOR 2SC1364
Q115	8-729-100-13	TRANSISTOR 2SC2001
Q116	8-729-663-47	TRANSISTOR 2SC1364
Q117	8-729-663-47	TRANSISTOR 2SC1364
Q118	8-729-663-47	TRANSISTOR 2SC1364
Q119	8-729-663-47	TRANSISTOR 2SC1364
Q201	8-729-334-58	TRANSISTOR 2SC1345
Q202	8-729-334-58	TRANSISTOR 2SC1345
Q203	8-729-663-47	TRANSISTOR 2SC1364
Q204	8-729-663-47	TRANSISTOR 2SC1364
Q205	8-729-663-47	TRANSISTOR 2SC1364
Q206	8-729-663-47	TRANSISTOR 2SC1364
Q207	8-729-663-47	TRANSISTOR 2SC1364
Q208	8-729-663-47	TRANSISTOR 2SC1364

NOTE:
- Items with no part number and no description are not stocked because they are seldom required for routine service.
- Items marked " ♦ " are not stocked since they are seldom required for routine service. Some delay should be anticipated when ordering these items.
- Due to standardization, parts with part numbers (Δ-ΔΔΔ-ΔΔΔ-XX or Δ-ΔΔΔΔ-ΔΔΔ-X) may be different from those used in the set.

SEMICONDUCTORS
In each case, U : μ, for example:
UA···: μA···, UPA···: μPA···, UPC···: μPC, UPD···: μPD···

CAPACITORS:
- All capacitors are in μF. Common capacitors are omitted. Refer to the following lists for their part numbers. MF: μF, PF: μμF.

RESISTORS
- All resistors are in ohms. Common 1/4W, 1/8W and 1/16W carbon resistors are omitted. Refer to the following lists for their part numbers.
- F : nonflammable

COILS
- MMH : mH, UH : μH

The components identified by shading and mark ⚠ are critical for safety. Replace only with part number specified.

Les composants identifiés par une trame et une marque ⚠ sont critiques pour la sécurité. Ne les remplacer que par une pièce portant le numéro spécifié.

ELECTRICAL PARTS

Ref.No.	Part No.	Description
Q209	8-729-663-47	TRANSISTOR 2SC1364
Q210	8-729-663-47	TRANSISTOR 2SC1364
Q211	8-729-663-47	TRANSISTOR 2SC1364
Q212	8-729-663-47	TRANSISTOR 2SC1364
Q213	8-729-663-47	TRANSISTOR 2SC1364
Q214	8-729-663-47	TRANSISTOR 2SC1364
Q215	8-729-100-13	TRANSISTOR 2SC2001
Q216	8-729-663-47	TRANSISTOR 2SC1364
Q217	8-729-663-47	TRANSISTOR 2SC1364
Q218	8-729-663-47	TRANSISTOR 2SC1364
Q219	8-729-663-47	TRANSISTOR 2SC1364
Q301	8-729-612-77	TRANSISTOR 2SA1027R
Q302	8-729-663-47	TRANSISTOR 2SC1364
Q303	8-729-663-47	TRANSISTOR 2SC1364
Q304	8-729-663-47	TRANSISTOR 2SC1364
Q306	8-729-663-47	TRANSISTOR 2SC1364
Q307	8-729-663-47	TRANSISTOR 2SC1364
Q308	8-729-141-43	TRANSISTOR 2SD414
Q309	8-729-663-47	TRANSISTOR 2SC1364
Q310	8-729-663-47	TRANSISTOR 2SC1364
Q311	8-729-154-83	TRANSISTOR 2SB548
Q312	8-729-612-77	TRANSISTOR 2SA1027R
Q313	8-729-612-77	TRANSISTOR 2SA1027R
Q314	8-729-663-47	TRANSISTOR 2SC1364
Q315	8-729-663-47	TRANSISTOR 2SC1364
Q316	8-729-612-77	TRANSISTOR 2SA1027R
Q317	8-729-663-47	TRANSISTOR 2SC1364
Q318	8-729-663-47	TRANSISTOR 2SC1364
Q319	8-729-663-47	TRANSISTOR 2SC1364
Q320	8-729-612-77	TRANSISTOR 2SA1027R
Q321	8-729-663-47	TRANSISTOR 2SC1364
Q502	8-729-178-54	TRANSISTOR 2SC2785
Q503	8-729-178-54	TRANSISTOR 2SC2785
Q504	8-729-178-54	TRANSISTOR 2SC2785
Q505	8-729-117-54	TRANSISTOR 2SA1175
Q506	8-729-117-54	TRANSISTOR 2SA1175
Q507	8-729-117-54	TRANSISTOR 2SA1175
Q508	8-729-117-54	TRANSISTOR 2SA1175
Q509	8-729-178-54	TRANSISTOR 2SC2785
Q510	8-729-178-54	TRANSISTOR 2SC2785
Q511	8-729-178-54	TRANSISTOR 2SC2785
Q512	8-729-178-54	TRANSISTOR 2SC2785
Q550	8-719-902-01	PHOTO INTERRUPTOR SPI201
Q580	8-729-178-54	TRANSISTOR 2SC2785
Q585	8-729-178-54	TRANSISTOR 2SC2785

ELECTRICAL PARTS

Ref.No.	Part No.	Description
R182	1-214-966-00	METAL 1.2M 1% 1/4W
R282	1-214-966-00	METAL 1.2M 1% 1/4W
R355 ⚠	1-217-395-00	RES, FUSE 47 1/4W
RV101	1-226-236-00	RES, ADJ, CARBON 10K
RV102	1-226-237-00	RES, ADJ, CARBON 20K
RV103	1-226-991-00	RES, VAR, SLIDE 20K/20K
RV201	1-226-236-00	RES, ADJ, CARBON 10K
RV202	1-226-237-00	RES, ADJ, CARBON 20K
RV203	1-226-991-00	RES, VAR, SLIDE 20K/20K
RV401	1-226-236-00	RES, ADJ, CARBON 10K
RV402	1-226-236-00	RES, ADJ, CARBON 10K
RY301	1-515-473-00	RELAY
S301	1-554-209-00	SWITCH, PUSH (4 KEY)
S302	1-554-209-00	SWITCH, PUSH (4 KEY)
S303	1-554-209-00	SWITCH, PUSH (4 KEY)
S304	1-554-209-00	SWITCH, PUSH (4 KEY)
S305 ⚠	1-553-318-00	(AEP,UK,E).....SWITCH, PUSH
S305 ⚠	1-553-319-00	(US,Canadian)...SWITCH, PUSH
S550	1-554-208-00	SWITCH, SLIDE
S553	1-554-205-00	SWITCH, SLIDE
S554	1-554-205-00	SWITCH, SLIDE
S570	1-553-545-00	SWITCH, PUSH (1 KEY)
S561	1-554-210-00	SWITCH, PUSH
S562	1-554-210-00	SWITCH, PUSH
S563	1-554-210-00	SWITCH, PUSH
S564	1-554-210-00	SWITCH, PUSH
S565	1-554-210-00	SWITCH, PUSH
S566	1-554-210-00	SWITCH, PUSH
S567	1-554-210-00	SWITCH, PUSH
S568	1-554-210-00	SWITCH, PUSH
T301 ⚠	1-447-356-00	(US,Canadian)...TRANSFORMER, POWER
T301 ⚠	1-447-357-00	(E).....TRANSFORMER, POWER
T301 ⚠	1-447-358-00	(UK,AEP).....TRANSFORMER, POWER
T401	1-433-257-00	TRANSFORMER, BIAS OSCILLATOR
VS1 ⚠	1-526-576-00	(E).....VOLTAGE, SELECTOR

NOTE:
- Items with no part number and no description are not stocked because they are seldom required for routine service.
- Items marked " ♦ " are not stocked since they are seldom required for routine service. Some delay should be anticipated when ordering these items.
- Due to standardization, parts with part numbers (Δ-ΔΔΔ-ΔΔΔ-XX or Δ-ΔΔΔΔ-ΔΔΔ-X) may be different from those used in the set.

SEMICONDUCTORS
In each case, U : μ, for example:
UA···: μA···, UPA···: μPA···, UPC···: μPC, UPD···: μPD···

CAPACITORS:
- All capacitors are in μF. Common capacitors are omitted. Refer to the following lists for their part numbers. MF: μF, PF: μμF.

RESISTORS
- All resistors are in ohms. Common 1/4W, 1/8W and 1/16W carbon resistors are omitted. Refer to the following lists for their part numbers.
- F : nonflammable

COILS
- MMH : mH, UH : μH

The components identified by shading and mark ⚠ are critical for safety. Replace only with part number specified.

Les composants identifiés par une trame et une marque ⚠ sont critiques pour la sécurité. Ne les remplacer que par une pièce portant le numéro spécifié.

ELECTROLYTIC CAPACITORS

RATING → : Use the high voltage rated one.

CAP. (μF)	6.3 VOLT.	10 VOLT.	16 VOLT.	25 VOLT.	35 VOLT.	50 VOLT.
	PART No.	PART No.	PART No.	PART No.	PART No.	PART No.
0.47					→	1-121-726-00
1.0					→	1-121-391-00
2.2					→	1-121-450-00
3.3	→	→	→	1-121-392-00	→	1-121-393-00
4.7	→	→	→	1-121-395-00	→	1-121-396-00
10	→	→	1-121-651-00	1-121-398-00	→	1-121-738-00
22	→	→	1-121-479-00	1-121-480-00	1-121-662-00	1-121-152-00
33	→	→	1-121-403-00	1-121-404-00	1-121-652-00	1-121-405-00
47	→	1-121-352-00	1-121-409-00	1-121-410-00	1-121-653-00	1-121-411-00
100	→	1-121-414-00	1-121-415-00	1-121-416-00	1-121-357-00	1-121-417-00
220	1-121-419-00	1-121-420-00	1-121-421-00	1-121-422-00	1-121-261-00	1-121-423-00
330	1-121-751-00	1-121-805-00	1-121-521-00	1-121-654-00	1-121-655-00	1-121-656-00
470	1-121-424-00	1-121-425-00	1-121-426-00	1-121-733-00	1-121-361-00	1-121-810-00
1000	–	1-121-736-00	1-121-245-00	1-121-657-00	1-121-388-00	1-123-061-00
2200	1-121-658-00	1-121-659-00	1-121-660-00	1-123-067-00	1-121-984-00	–
3300	1-121-661-00	1-123-075-00	1-123-071-00	–	–	–

CAP. (μF)	100 VOLT.	160 VOLT.	250 VOLT.	350 VOLT.
	PART No.	PART No.	PART No.	PART No.
0.47	–	–	–	–
1.0	1-123-249-00	1-123-252-00	1-123-003-00	1-121-168-00
2.2	1-123-250-00	1-123-026-00	–	1-123-028-00
3.3	1-121-995-00	–	1-123-004-00	1-123-006-00
4.7	1-123-255-00	1-121-246-00	1-121-759-00	1-123-007-00
10	1-121-126-00	1-121-999-00	1-123-254-00	1-123-008-00
22	1-121-996-00	1-123-253-00	1-123-005-00	1-123-022-00
33	1-121-997-00	1-121-757-00	–	–
47	1-123-251-00	1-121-919-00	–	–
100	1-123-084-00	–	–	–

CERAMIC CAPACITORS

RATING

CAP. (pF)	50 VOLT.	CAP. (pF)	50 VOLT.	CAP. (pF)	50 VOLT.	CAP. (μF)	50 VOLT.
	PART No.		PART No.		PART No.		PART No.
0.5	1-101-837-00	22	1-102-959-00	150	1-101-361-00	0.001	1-102-074-00
0.75	1-101-586-00	24	1-102-960-00	160	1-101-367-00	0.0012	1-102-118-00
1.0	1-102-934-00	27	1-102-961-00	180	1-102-976-00	0.0015	1-102-119-00
1.5	1-101-576-00	30	1-102-962-00	200	1-102-977-00	0.0018	1-102-120-00
2.0	1-102-935-00	33	1-102-963-00	220	1-102-978-00	0.0022	1-102-121-00
3	1-102-936-00	36	1-102-964-00	240	1-102-979-00	0.0027	1-102-122-00
4	1-102-937-00	39	1-102-965-00	270	1-102-980-00	0.0033	1-102-123-00
5	1-102-942-00	43	1-102-966-00	300	1-102-981-00	0.0039	1-102-124-00
6	1-102-943-00	47	1-101-880-00	330	1-102-820-00	0.0047	1-102-125-00
7	1-102-944-00	51	1-101-882-00	360	1-102-821-00	0.0056	1-102-126-00
8	1-102-945-00	56	1-101-884-00	390	1-102-822-00	0.0068	1-102-127-00
9	1-102-946-00	62	1-101-886-00	430	1-102-823-00	0.0082	1-102-128-00
10	1-102-947-00	68	1-101-888-00	470	1-102-824-00	0.01	1-102-129-00
11	1-102-948-00	75	1-101-890-00	510	1-101-059-00	0.022	1-101-005-00
12	1-102-949-00	82	1-102-971-00	560	1-102-115-00	0.047	1-101-006-00
13	1-102-950-00	91	1-102-972-00	680	1-102-116-00		
15	1-102-951-00	100	1-102-973-00	820	1-102-117-00		
16	1-102-952-00	110	1-102-815-00				
18	1-102-953-00	120	1-102-816-00				
20	1-102-958-00	130	1-101-081-00				

0.001μF = 1,000pF

CERAMIC (SEMICONDUCTOR) CAPACITORS

RATING → : Use the high voltage rated one.

CAP. (μF)	25 VOLT.	50 VOLT.	CAP. (μF)	25 VOLT.	50 VOLT.
	PART No.	PART No.		PART No.	PART No.
0.001	→	1-161-039-00	0.018	1-161-016-00	1-161-054-00
0.0012	→	1-161-040-00	0.022	1-161-017-00	1-161-055-00
0.0015		1-161-041-00	0.027	1-161-018-00	1-161-056-00
0.0018		1-161-042-00	0.033	1-161-019-00	1-161-057-00
0.0022		1-161-043-00	0.039	1-161-010-00	1-161-058-00
0.0027	→	1-161-044-00	0.047	1-161-021-00	1-161-059-00
0.0033	→	1-161-045-00	0.056	→	1-161-060-00
0.0039	→	1-161-046-00	0.068	→	1-161-061-00
0.0047	→	1-161-047-00	0.082	1-161-024-00	1-161-062-00
0.0056	→	1-161-048-00	0.1	1-161-025-00	1-161-063-00
0.0068	→	1-161-049-00			
0.0082	1-161-012-00	1-161-050-00			
0.01	1-161-013-00	1-161-051-00			
0.012	→	1-161-052-00			
0.015	1-161-015-00	1-161-053-00			

MYLAR CAPACITORS

CAP. (μF)	RATING 50 VOLT. PART No.	100 VOLT. PART No.	200 VOLT. PART No.	CAP. (μF)	50 VOLT. PART No.	100 VOLT. PART No.	200 VOLT. PART No.	CAP. (μF)	50 VOLT. PART No.	100 VOLT. PART No.	200 VOLT. PART No.
0.001	1-108-227-00	1-108-365-00	1-108-409-00	0.01	1-108-239-00	1-108-377-00	1-108-421-00	0.1	1-108-251-00	1-108-389-00	1-108-433-00
0.0012	1-108-351-00	1-108-366-00	1-108-410-00	0.012	1-108-357-00	1-108-378-00	1-108-422-00	0.12	1-108-363-00	1-108-390-00	1-108-434-00
0.0015	1-108-228-00	1-108-367-00	1-108-411-00	0.015	1-108-240-00	1-108-379-00	1-108-423-00	0.15	1-108-252-00	1-108-391-00	1-108-435-00
0.0018	1-108-352-00	1-108-368-00	1-108-412-00	0.018	1-108-358-00	1-108-380-00	1-108-424-00	0.18	1-108-364-00	1-108-392-00	1-108-436-00
0.0022	1-108-230-00	1-108-369-00	1-108-413-00	0.022	1-108-242-00	1-108-381-00	1-108-425-00	0.22	1-108-254-00	1-108-393-00	1-108-437-00
0.0027	1-108-353-00	1-108-370-00	1-108-414-00	0.027	1-108-359-00	1-108-382-00	1-108-426-00	0.27	1-108-854-00	–	–
0.0033	1-108-232-00	1-108-371-00	1-108-415-00	0.033	1-108-244-00	1-108-383-00	1-108-427-00	0.33	1-108-855-00	–	–
0.0039	1-108-354-00	1-108-372-00	1-108-416-00	0.039	1-108-360-00	1-108-384-00	1-108-428-00	0.39	1-108-856-00	–	–
0.0047	1-108-234-00	1-108-373-00	1-108-417-00	0.047	1-108-246-00	1-108-385-00	1-108-429-00	0.47	1-108-857-00	–	–
0.0056	1-108-355-00	1-108-374-00	1-108-418-00	0.056	1-108-361-00	1-108-386-00	1-108-430-00				
0.0068	1-108-237-00	1-108-375-00	1-108-419-00	0.068	1-108-249-00	1-108-387-00	1-108-431-00				
0.0082	1-108-356-00	1-108-376-00	1-108-420-00	0.082	1-108-362-00	1-108-388-00	1-108-432-00				

TANTALUM CAPACITORS

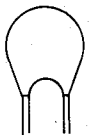

CAP. (μF)	RATING → : Use the high voltage rated one. 3.15 VOLT. PART No.	6.3 VOLT. PART No.	10 VOLT. PART No.	16 VOLT. PART No.	20 VOLT. PART No.	25 VOLT. PART No.	35 VOLT. PART No.
0.01					→	→	1-131-396-00
0.015						→	1-131-397-00
0.022						→	1-131-398-00
0.033						→	1-131-399-00
0.047						→	1-131-400-00
0.068					→	→	1-131-401-00
0.1					→	→	1-131-402-00
0.15					→	→	1-131-403-00
0.22					→	→	1-131-404-00
0.33					→	1-131-409-00	1-131-405-00
0.47	–	–	–	–	1-131-412-00	→	1-131-406-00
0.68	–	–	–	1-131-415-00	→	1-131-410-00	1-131-407-00
1.0	–	–	1-131-418-00	–	1-131-413-00	→	1-131-408-00
1.5	–	1-131-421-00	–	1-131-416-00	→	1-131-411-00	1-131-348-00
2.2	1-131-424-00	–	1-131-419-00	–	1-131-414-00	1-131-355-00	1-131-349-00
3.3	–	1-131-422-00	–	1-131-417-00	1-131-362-00	1-131-356-00	1-131-350-00
4.7	1-131-425-00	–	1-131-420-00	1-131-369-00	1-131-363-00	1-131-357-00	1-131-351-00
6.8	–	1-131-423-00	1-131-376-00	1-131-370-00	1-131-364-00	1-131-358-00	1-131-352-00
10	1-131-426-00	1-131-383-00	1-131-377-00	1-131-371-00	1-131-365-00	1-131-359-00	1-131-353-00
15	1-131-390-00	1-131-384-00	1-131-378-00	1-131-372-00	1-131-366-00	1-131-360-00	–
22	1-131-391-00	1-131-385-00	1-131-379-00	1-131-373-00	1-131-367-00		
33	1-131-392-00	1-131-386-00	1-131-380-00	1-131-374-00			
47	1-131-393-00	1-131-387-00	1-131-381-00	–			
68	1-131-394-00	1-131-388-00	–	–			
100	1-131-395-00	–	–	–			

TANTALUM CAPACITORS

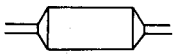

CAP. (μF)	RATING 3 VOLT. PART No.	6.3 VOLT. PART No.	10 VOLT. PART No.	16 VOLT. PART No.	20 VOLT. PART No.	35 VOLT. PART No.
0.033						1-131-273-00
0.047						1-131-274-00
0.068						1-131-275-00
0.1						1-131-276-00
0.15						1-131-277-00
0.22			–	–	1-131-262-00	1-131-278-00
0.33			–	–	1-131-263-00	1-131-279-00
0.47			1-131-169-00	–	1-131-264-00	1-131-280-00
0.68			–	1-131-258-00	1-131-265-00	1-131-281-00
1.0			1-131-254-00	–	1-131-266-00	1-131-282-00
1.5		1-131-250-00	–	–	1-131-267-00	1-131-283-00
2.2		–	–	1-131-259-00	1-131-268-00	1-131-284-00
3.3		–	1-131-255-00	–	1-131-269-00	–
4.7		1-131-251-00	1-131-171-00	–	1-131-270-00	–
6.8		–	–	1-131-260-00	1-131-271-00	–
10	–	–	1-131-256-00	–	1-131-272-00	–
15	–	1-131-252-00	–	1-131-261-00		
22	–	–	1-131-257-00	–		
33	1-131-176-00	1-131-253-00	1-131-173-00	–		
47	1-131-288-00	1-131-174-00	–	–		
100	1-131-177-00					

1/4 WATT CARBON RESISTORS

Ω	Part No.	Ω	Part No.	Ω	Part No.	Ω	Part No.	Ω	Part No.	Ω	Part No.	Ω	Part No.
1.0	1-246-401-00	10	1-246-425-00	100	1-246-449-00	1.0k	1-246-473-00	10k	1-246-497-00	100k	1-246-521-00	1.0M	1-246-545-00
1.1	1-246-402-00	11	1-246-426-00	110	1-246-450-00	1.1k	1-246-474-00	11k	1-246-498-00	110k	1-246-522-00	1.1M	1-210-814-00
1.2	1-246-403-00	12	1-246-427-00	120	1-246-451-00	1.2k	1-246-475-00	12k	1-246-499-00	120k	1-246-523-00	1.2M	1-210-815-00
1.3	1-246-404-00	13	1-246-428-00	130	1-246-452-00	1.3k	1-246-476-00	13k	1-246-500-00	130k	1-246-524-00	1.3M	1-210-816-00
1.5	1-246-405-00	15	1-246-429-00	150	1-246-453-00	1.5k	1-246-477-00	15k	1-246-501-00	150k	1-246-525-00	1.5M	1-210-817-00
1.6	1-246-406-00	16	1-246-430-00	160	1-246-454-00	1.6k	1-246-478-00	16k	1-246-502-00	160k	1-246-526-00	1.6M	1-210-818-00
1.8	1-246-407-00	18	1-246-431-00	180	1-246-455-00	1.8k	1-246-479-00	18k	1-246-503-00	180k	1-246-527-00	1.8M	1-210-819-00
2.0	1-246-408-00	20	1-246-432-00	200	1-246-456-00	2.0k	1-246-480-00	20k	1-246-504-00	200k	1-246-528-00	2.0M	1-210-820-00
2.2	1-246-409-00	22	1-246-433-00	220	1-246-457-00	2.2k	1-246-481-00	22k	1-246-505-00	220k	1-246-529-00	2.2M	1-210-821-00
2.4	1-246-410-00	24	1-246-434-00	240	1-246-458-00	2.4k	1-246-482-00	24k	1-246-506-00	240k	1-246-530-00	2.4M	1-244-754-00
2.7	1-246-411-00	27	1-246-435-00	270	1-246-459-00	2.7k	1-246-483-00	27k	1-246-507-00	270k	1-246-531-00	2.7M	1-244-755-00
3.0	1-246-412-00	30	1-246-436-00	300	1-246-460-00	3.0k	1-246-484-00	30k	1-246-508-00	300k	1-246-532-00	3.0M	1-244-756-00
3.3	1-246-413-00	33	1-246-437-00	330	1-246-461-00	3.3k	1-246-485-00	33k	1-246-509-00	330k	1-246-533-00	3.3M	1-244-757-00
3.6	1-246-414-00	36	1-246-438-00	360	1-246-462-00	3.6k	1-246-486-00	36k	1-246-510-00	360k	1-246-534-00	3.6M	1-244-758-00
3.9	1-246-415-00	39	1-246-439-00	390	1-246-463-00	3.9k	1-246-487-00	39k	1-246-511-00	390k	1-246-535-00	3.9M	1-244-759-00
4.3	1-246-416-00	43	1-246-440-00	430	1-246-464-00	4.3k	1-246-488-00	43k	1-246-512-00	430k	1-246-536-00	4.3M	1-244-760-00
4.7	1-246-417-00	47	1-246-441-00	470	1-246-465-00	4.7k	1-246-489-00	47k	1-246-513-00	470k	1-246-537-00	4.7M	1-244-761-00
5.1	1-246-418-00	51	1-246-442-00	510	1-246-466-00	5.1k	1-246-490-00	51k	1-246-514-00	510k	1-246-538-00	5.1M	1-244-762-00
5.6	1-246-419-00	56	1-246-443-00	560	1-246-467-00	5.6k	1-246-491-00	56k	1-246-515-00	560k	1-246-539-00		
6.2	1-246-420-00	62	1-246-444-00	620	1-246-468-00	6.2k	1-246-492-00	62k	1-246-516-00	620k	1-246-540-00		
6.8	1-246-421-00	68	1-246-445-00	680	1-246-469-00	6.8k	1-246-493-00	68k	1-246-517-00	680k	1-246-541-00		
7.5	1-246-422-00	75	1-246-446-00	750	1-246-470-00	7.5k	1-246-494-00	75k	1-246-518-00	750k	1-246-542-00		
8.2	1-246-423-00	82	1-246-447-00	820	1-246-471-00	8.2k	1-246-495-00	82k	1-246-519-00	820k	1-246-543-00		
9.1	1-246-424-00	91	1-246-448-00	910	1-246-472-00	9.1k	1-246-496-00	91k	1-246-520-00	910k	1-246-544-00		

HARDWARE NOMENCLATURE

Screw:

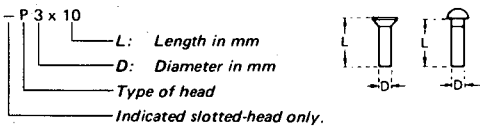

Nut, Washer, Retaining ring:

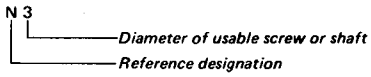

Reference Designation	Shape	Description	Remarks
SCREWS			
P		pan-head screw	binding-head (B) screw for replacement
PWH		pan-head screw with washer face	binding-head (B) screw and flat washer for replacement
PS PSP		pan-head screw with spring washer	binding-head (B) screw and spring washer for replacement
PSW PSPW		pan-head screw with spring and flat washers	binding-head (B) screw and spring and flat washers for replacement
R		round-head screw	binding-head (B) screw for replacement
K		flat-countersunk-head screw	
RK		oval-countersunk-head screw	
B		binding-head screw	
T		truss-head screw	binding-head (B) screw for replacement
F		flat-fillister-head screw	
RF		fillister-head screw	
BV		brazier-head screw	

Reference Designation	Shape	Description	Remarks
SELF-TAPPING SCREWS			
TA		self-tapping screw	ex: TA, P 3 x 10
PTP		pan-head self-tapping screw	binding-head self-tapping (TA, B) screw for replacement
PTPWH		pan-head self-tapping screw with washer face	binding-head self tapping (TA, B) screw and flat washer for replacement
PTTWH		pan-head thread-rolling screw with washer face	binding-head (B) screw and flat washer for replacement
SET SCREWS			
SC		set screw	
SC		hexagon-socket set screw	ex: SC 2.6 x 4, hexagon socket
NUT			
N		nut	
WASHERS			
W		flat washer	
SW		spring washer	
LW		internal-tooth lock washer	ex: LW3, internal
LW		external-tooth lock washer	ex: LW3, external
RETAINING RINGS			
E		retaining ring	
G		grip-type retaining ring	